Int. J. Mech. Eng. & Rob. Res. 2014

International Journal of Mechanical Engineering and Robotics Research

ISSN 2278 – 0149 www.ijmerr.com
Vol. 3, No. 3, July, 2014
© 2014 IJMERR. All Rights Reserved

Research Paper

DESIGN & DEVELOPMENT OF AUTOMATIC FASTFOOD MACHINE

Amit B Solanki[1]*, V R Solanki[1] and D N Shah[1]

Corresponding Author: **Amit B Solanki ✉ solankiamit4239@gmail.com*

Goal of this paper is propose the detail design and development of automated fast food machine for large food industry applications. Automated fast food machine is a device that squeezing the duff mixture of fast food with following categorized efficiency such as time, human effort, safety, cleaning and quality during fast food making. In this design, it is mainly notified about cost of the machine as well as time efficiency. This designed machine can squeeze duff mixture using screw extruder with electric power, and extruded out using rotating conveyer from machine die to away as near to operator. Therefore, production rate of the fast food making machine is high compared with other manual and commercially available machines.

Keywords: Automated fast food machine, Food industry, String hopper machine

INTRODUCTION

Problem Definition - This fast food making device is commonly made with a handheld hand-made wooden device consist of a small cup have a cylindrical through bore extend from its top to bottom. A metal plate with a large number of pores formed therein is mounted with screws at the bottom of the cup so that the bore forms a cylindrical tube there in for holding the dough mixer. The cup has two grips extending outwards from its two opposite sides. A wooden cylindrical plunger having the corresponding size as the cylindrical tube is mounted on a carrier which also has two opposite side grip similar to the cup. The device is operated by placing the dough mixture into the cylindrical tube of the cup and then inserting the plunger into the cylindrical tube and squeezing the grips of the plunger and the cup tightly towards another by hands so as to extrude the dough through the plate with the plunger to the different form. While extruding the fast food, the operator must also move the device in a circular motion so as to deposit the fast food onto as team tray for its subsequent cooking.

Patent Review -

String hopper making machine
US 7160098 B2

[1] Department of Mechanical Engineering, C.U. Shah University, Surendranagar, Gujarat, India.

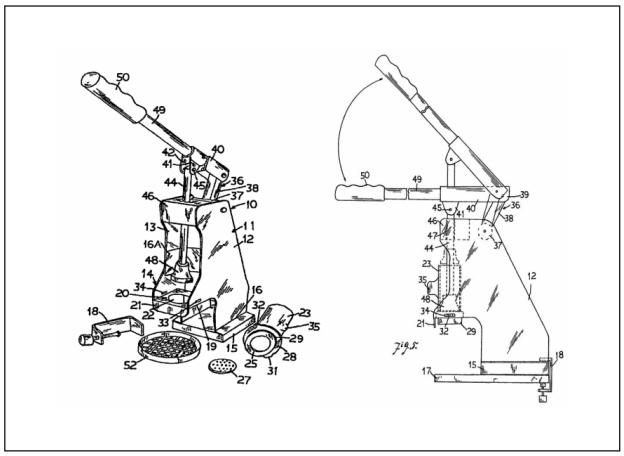

Publication number	US7160098 B2
Publication type	Grant
Application number	US 10/816,035
Publication date	Jan 9, 2007
Filing date	Apr 2, 2004
Priority date	Apr 2, 2004
Fee status	Paid
Also published as	US20050220922, WO2005094589A1
Inventors	Rudland Eward Ingles
Original Assignee	Rudland Eward Ingles

Screw extruder for synthetic plastics material

US 3850415 A

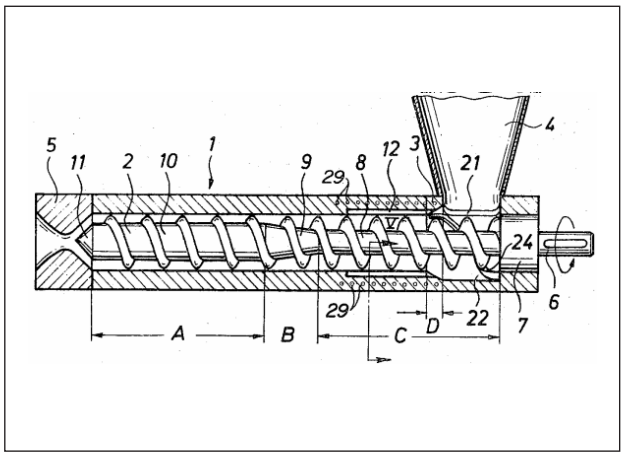

Publication number	US3850415 A
Publication type	Grant
Publication date	Nov 26, 1974
Filing date	Mar 12, 1973
Priority date	Mar 25, 1972
Also published as	DE2214715A1, DE2214715B2, DE2214715C3
Inventors	Hansen G
Original Assignee	Hansen G

Functional Analysis - The following figure shows the functions of string type food squeezing device which can automatically getting the string hopper after feeding the dough to machine. These functions can be performed different ways which are showed in following morphological chart.

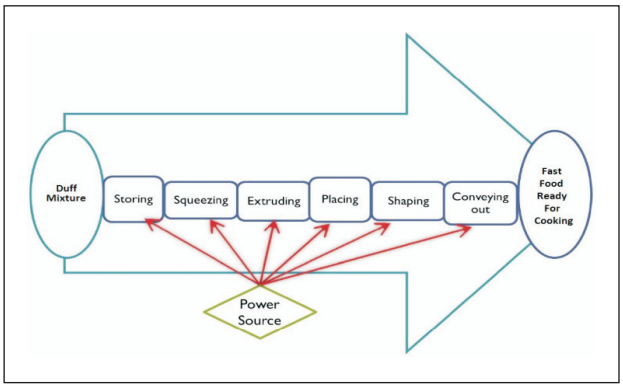

Morphological Chart - This chart describe the possible method to select concept which are mostly satisfying with above function.

Details Chart of Concept Morphological -

Final Concept Selection -

Animation of Machine -

Design Specification & Costing of Element -

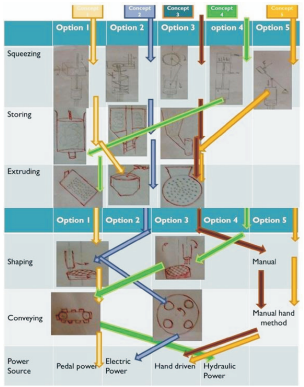

Animation of Machine

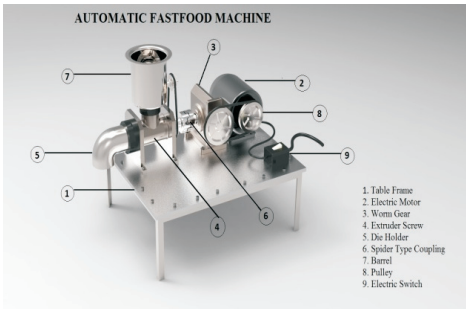

Details Chart of Concept Morphological

Functions	Concept 1	Concept 2	Concept 3	Concept 4	Concept 5
Storing	Within the cylinder for batch process	Hopper with screw feeder	Hopper	Within the cylinder for batch process	Hopper
Squeezing	Power screw mechanism	Screw extruding	Sliding crank mechanism	Hydraulic system	2 Lever mechanism
Extruding	Screw cup with holes	Screw cup with holes	Circular plates with holes	Rectangle plates with holes	Circular plates with holes
Shaping	Rotating mates	Rotating mates	Manual	Rotating mold	Manual
Conveying	Belt conveyer	Rotating disk	Manual	Belt conveyer	Manual
Power source	Manual	Electric power	Hand driven	Hydraulic power (Electric power)	Hand driven

Final Concept Selection

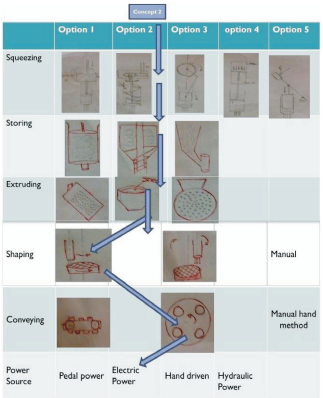

Design Specification & Costing of Element

Sl. No.	Parts name	Specifications of parts	Qty.	Cost
1.	Electric motor	V = 230v/50w A = 0.6 rpm 3000	1	1500
2.	Worm gear box	30:1	1	2500
3.	Spider coupling	Std	1	300
4.	Bearing	Ball bearing	1	200
5.	Screw extruder	D = 40mm	1	2500
6.	Cylinder pipe	D = 42 mm	1	400
7.	Cylinder pipe threding	Thred 2 mm	2	200
8.	Barrel	Stainless steel d = 110mm	1	500
9.	Barrel holder	D = 110 mm	1	800
10.	Die holder	D = 42 mm	1	60
11.	Die	Stainless steel	3	75
12.	Belt	Circular belt rope 10mm	2	50
13.	Belt pulley	V-shape pulley 70mm	3	100
14.	Wooden top	L x bx h = 57 cmx 38 cmx1.6 cm	1	300
15.	Angle plate	L x bx h = 55 cm x 35 cm x 35 cm	8	400
16.	Nut & bolts	M8 pcd 35	26	225
17.	Switch bord	5 amp	1	60
18.	Electric wire	Coper 1/18	1	96
19.	Labour cost	Nil	-	2500
20.	Transportation cost	Nil	-	1000
	TOTAL COST			**13,766**

CONCLUSION

The detail design and development of automated fast food machine for large food industry applications. Automated fast food machine is a device that squeezing the duff mixture of fast food with following categorized efficiency such as time, human effort, safety, cleaning and quality during fast food making. In this design, it is mainly notified about cost of the machine as well as time efficiency.Therefore, production rate of the fast food making machine is high compared with other manual and commercially available machines.

REFERENCES

1. A W Birley, B Haworth and J Batchelor (1992), "Single-Screw Extrusion the Extruder Characteristic", *Physics of Plastics: Processing, Properties and Materials Engineering, Hanser*, Vol. 4.
2. Chunguang Wang, Shaocong Dai and Roger I (2006), "Tanner on the Compressibility of Bread Dough", *Received May 17, 2006, final revision received*.
3. Design basis and Hydrodynamic performance analysis of single-screw extruders
4. Espacenet Patent Search
5. Google Patent Search
6. Peter Fischer and Johannes Wortberg (1997), "Single-Screw Extruders and Barrier Screws".
7. R S Khurmi and J K Gupta (2005), "A Textbook of Machine Design", S Chand & Co Ltd; 14th Edition.