Transition of Small-sized GTE to Cryogenic Fuel

Dmitry Uglanov, Artem Novikov, and Daria Aksenova
Samara University, Moskovskoe shosse 34, 443086, Samara, Russia
Email: dmitry.uglanov@mail.ru, { nvart17, daraks2016}@ mail.ru

***Abstract*—This article shows the translation of a small-sized GTE from kerosene to cryogenic fuel. A comparison of cryogenic fuel types is proposed. The justification of the choice of the evaporate heat exchanger is shown, its characteristics are calculated. At this stage of the work, the most optimal scheme of the small-size GTE fuel supply system for unmanned aerial vehicles has been selected.**

***Index Terms*—Cryogenic fuel, liquid hydrogen, liquefied natural gas, heat exchange, small-sized GTE**

I. Introduction

Interest in the design and development of unmanned aerial vehicles (UAV) has increased significantly over the past few decades [1]. UAVs can carry out various civilian and military missions, including photo and video reconnaissance, reconnaissance of radio-electronic air defense equipment, reconnaissance of the biological, chemical and radiation situation, retransmission of the signal of communication equipment, and can also be used to suppress enemy air defenses and as a false target for complicating the air situation. All these missions are ideal for UAVs, which can be both stand-alone and remotely controlled.

But in parallel with this another problem is connected. The development of industry and transport throughout the world in the last 20-30 years, associated with the scientific and technological revolution, has caused a sharp increase in energy consumption and, as a result, increased consumption of hydrocarbon fuels. Mankind faced two global challenges: - the search for opportunities and ways of transition from fuels derived from oil to new alternative fuels; - development and adoption of national energy and transport programs aimed at significantly reducing the amount of harmful emissions to the atmosphere. With particular urgency, these problems have arisen before aviation, so this article suggests the approach of transition of a small-sized GTE to cryogenic fuel[2].

The main requirements for aviation fuels are:

a) high energy quality, determined by the highest value of the net calorific value, small molar mass of the combustion products, high density;
b) high kinetic quality, determined by the parameters of the process of combustion in air.
c) good operational quality, which includes storage in tanks during the flight and preflight preparation, while maintaining the required thermophysical properties of the fuel, including the vapor pressure and boiling point and freezing point, stability, the absence of increased toxicity;
d) absence of chemical interaction with the material tank (reservoir);
e) good environmental quality, meaning that the products of combustion of fuel in the air should have the minimum amount of harmful substances per cubic meter of exhaust gases: nitrogen oxides, carbon oxides, unburned hydrocarbons, smoke and benz (a) pyrene;
f) fuel should be affordable, cheap, convenient to handle, should require minimal changes to existing equipment when it is implemented.

In the light of such a wide range of requirements, we will consider below how cryogenic fuels - liquid hydrogen and LNG meet these requirements.

LNG belongs to a group of combustible substances which can form explosive mixtures with air. Concentration limits of ignition (methane) in a mixture with air in volume percent are: lower - 5; upper -15. The ignition temperature is at least 450 ° C. The calorific value of LNG is higher than that of kerosene, but the specific gravity is almost two times lower, which creates, in combination with low boiling point, certain difficulties in creating an airplane and an engine. With regard to the kinetics of combustion of natural gas, it favorably differs from kerosene kinetics, because the gaseous state of the LNG supplied to the combustion chamber eliminates the spraying stage of the liquid fuel, which in a large extent affects the environmental quality of combustion. The absence of drops during the supply of natural gas to the combustion chamber and their settling on the walls of the flame portion creates favorable conditions for the completion of chemical reactions in the combustion zone. The gaseous state at suppling to the combustion zone and the lower flame temperature with the stoichiometric composition of the mixture Tc = 2287 K (in kerosene 2335 K) leads to a reduction in harmful emissions compared to the combustion of kerosene-air mixtures[3].

Also promising fuel is hydrogen[4]. Hydrogen in ordinary conditions is a gas without color and odor. It is widely distributed in nature, its content in the earth's crust by mass is 7%. Hydrogen reserves today seem almost inexhaustible, in the world's ocean contains 2.2•1017 tons of hydrogen. In a free state, hydrogen is rare. In space, hydrogen is the most common element, in the form of plasma it is about half the mass of the sun and most of the stars. At normal pressures and temperatures, hydrogen

Manuscript received February 23, 2018; revised August 28, 2018.

doi: 10.18178/ijmerr.7.6.624-629

exists in a gaseous state, at a temperature of about 20.4 K it transforms into a liquid state, and at a lower temperature (14 K) into a solid state. The limits of ignition of hydrogen in air are between 4 and 75 percent of the hydrogen content, which is much broader than the concentration limits for most other combustibles. In the environment of pure oxygen, these limits are even wider and amount to 4.65 and 96% of the volume content of hydrogen. The values of the lower and upper limits of the detonation of mixtures of hydrogen with air are 18.3 and 74% of the hydrogen content. The high explosive and fire hazard of hydrogen is explained by its ability to easily enter into chemical interaction with the oxidizer, which is accompanied by the release of a large amount of heat. The reactions of the interaction of hydrogen with oxidants, as a rule, require for their initiation only an insignificant heat pulse. The energy of its ignition is on the average only 10% of the ignition energy of hydrocarbons.

The main advantages of liquid hydrogen consist of its high calorific value (in 2.8 times higher than in kerosene), high heat absorption capacity (in 30 times higher than kerosene), practically inexhaustible of its reserves on Earth, high "purity" of products Combustion in the air. Hydrogen is relatively easy to transport over considerable distances through pipes in special containers.

As shown by the studies of CIAM and JSC "Kuznetsov" combustion of hydrogen in combustion chambers is an easily controlled process, proceeding with a higher completeness of combustion with small excess air coefficients. Hydrogen is evenly distributed and diffuses well in the mixture, which excludes its local re-enrichment. Due to the good combustion characteristics, the process is more stable to high-frequency oscillations when the composition of the mixture is close to stoichiometric, and a high gas flow rate in the chamber is also allowed. The flame of hydrogen in air has a low emissivity.

II. Shifting of Small-sized GTE from Kerosene Fuel to Cryogenic Fuel

At Samara University, a small-sized GTE is being developed for unmanned vehicles. This engine was proposed to be converted to cryogenic fuel. At Samara University, a small-sized GTE is being developed for unmanned vehicles. This engine was proposed to be converted to cryogenic fuel. A small-sized GTE with thrust was first calculated for hydrogen and LNG. A heat exchanger was calculated and the feed circuit was simulated.

Table 1 presents the sizes of fuel tanks on a small-size GTE for kerosene, hydrogen and LNG.

The sizes were calculated by following formula:

$$V_{CF} = \frac{\rho_K * V_K * H_{uK}}{\rho_{CF} * H_{uCF}} \quad (1)$$

where – volume of cryogenic fuel tanks [l]; V_k – volume of kerosene fuel tanks [l]; ρ_k – density of kerosene[kg/m^3]; ρ_{CF} – density of cryogenic fuel[kg/m^3]; H_{uk} – calorific value of kerosene [J/kg];

H_{uCF} – calorific value of cryogenic fuel [J/kg].

TABLE I. Sizes of Fuel Tanks Depend on Operation Time of Small-sized GTE

Operation time [h]	1	3	5	7
Fuel rate, [kg/h]	60	170	280	390
Kerosine				
Volume, [l]	75	212,5	350	487,5
LNG				
Full volume, [l]	142,86	404,8	666,7	928,6
Mimimal volume of tank, [l]	137,5	389,54	641,6	893,7
Hydrogen				
Full volume, [l]	847,5	2401	3954,8	5508,5
Mimimal volume of tank, [l]	307,2	870,4	1434	1997

It can be seen that the fuel tanks of LNG and hydrogen are larger in volume than tanks with kerosene, but this is leveled by their properties, which was said earlier.

III. Calculation of the Heat Exchanger-Gasifier of Cryogenic Fuel in Small-size GTE

The experience gained in the process of working with NK-88 engines powered by liquid hydrogen and NK-89 powered by LNG allows us to conclude that the question of the need for gasification is especially acute when using cryogenic fuel[5]. Gasification of the cryogenic is a necessary condition for the normal operation of the engine. On the NK-89 engine under ground conditions, the first experimental studies of feeding liquid LNG into the combustion chamber were made, which showed that it is possible to work with liquid LNG under certain restrictions. However, these first experimental works can not serve as a basis for refusing gasification, since when the engine is running on low-gas modes up to 0.6 of

nominal, that is, with LNG costs significantly lower than nominal, the engine has been unstable. This section focuses on the gasification of liquid hydrogen. When creating and researching aviation gas turbine engines operating on liquid hydrogen, two principal schemes for supplying hydrogen to the combustion chamber are possible: liquid when hydrogen enters the combustion chamber nozzles in the liquid state, and a circuit with the supply of hydrogen to the combustion chamber in the gaseous state.

Structurally, at first glance, the simplest is the supply of hydrogen into the combustion chamber in a liquid state, that is, with a subcritical temperature and at a pressure in front of the nozzles of the combustion chamber above the pressure at the liquid-vapor interface (Fig.1). We will consider what this requires. In the low-gas engine mode, the pressure in the combustion chamber is 333.36 kPa and the hydrogen consumption is 0.016 kg / s. In this mode, the pump delivers liquid hydrogen at a temperature of 25 K, with a pressure of 700-800 kPa.

This minimum differential pressure can be used on the nozzles to get an injection of liquid hydrogen into the combustion chamber. Naturally, with an increase in the operating mode of the engine to the take-off with an increase in the flow rate of liquid hydrogen and the preservation of the quadratic dependence of the pressure drop on the flow rate, the maximum pressure difference at the injectors to supply liquid hydrogen to the combustion chamber will be 10,000 kPa.

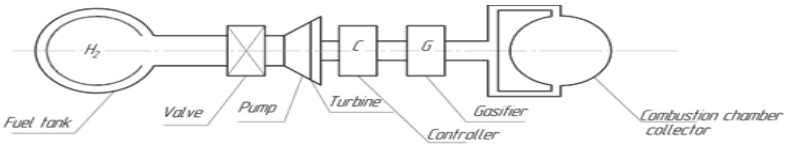

Figure 1. Structural scheme for liquid ydrogen injection

This is absolutely unrealistic in terms of reliability and power of the pump. You can, of course, consider the use of pressure-controlled injectors, but this will complicate the design too much and require a special nozzle control system. World experience with adjustable nozzles has so far produced only a negative result.

There is also a second significant reason for abandoning the liquid option. An ideal isolation of the supply lines of liquid hydrogen from the pump to the combustion chamber is necessary in order to avoid a phase transition of the liquid into the gas in them. But even if this requirement is fulfilled, even with a small circumferential uneven flow of air from the compressor at the inlet to the combustion chamber entering the nozzles, liquid hydrogen in an unstable critical point can be heated differently in different injectors and is in different phase states . This can cause an uneven supply of hydrogen through the nozzles and, as a consequence, a ripple of hydrogen flow and pressure, greater unevenness of the temperature field in front of the turbine and other undesirable phenomena. The phase transition phenomena in the hydrogen supply lines and the combustion chamber nozzles could be suppressed by applying a fuel supply scheme with a supercritical pressure state of hydrogen in all operating modes of the engine. However, the required pressures behind the pump will be even higher than in the example given. This is also unrealistic.

In the light of the drawbacks discussed above, a scheme with gasification of hydrogen in a special heat exchanger is more preferable. The required pressures behind the pump in this case are in 2 - 3 times lower than in the liquid scheme. This does not require an ideal isolation of the fuel supply line to the combustion chamber, since the hydrogen transition from one phase state to the other takes place in the gasifier. Provided special measures, it can be avoided the hydrodynamic instability of the process. In this scheme, a slight preheating of hydrogen before it is fed into the combustion chamber can also cause uneven distribution of hydrogen through separate nozzles due to the subsequent additional heating of hydrogen in the combustion chamber manifold. During the research, the lower limit of the temperature of hydrogen supplied to the combustion chamber was experimentally revealed, at which the engine operation is stable, without "swinging" the rotation frequency of the rotor. Special studies carried out to study this phenomenon showed that in the region of low temperatures of hydrogen supplied (35 - 40 K), due to a large change in the hydrogen density with a temperature change of one degree, a hydraulic instability appears in the system "collector of hydrogen distribution in the combustion chamber - injector modules ". Heating of hydrogen in the heat exchanger to a temperature of 60 K and more eliminates this phenomenon. The results of experiments with different hydrogen heating show that, at a hydrogen temperature above 60 K, the unevenness of the temperature field behind the combustion chamber decreases to the standard values for kerosene combustion chambers. The phenomenon of "swinging" the rotor speed of the engine also disappears.

Of course, the gasification system also has its drawbacks:

- The heat exchanger increases the weight of the engine and is another engine assembly, creating conditions to reduce engine reliability;
- Loss of heating medium pressure appears, which worsens specific engine parameters;
- There is a problem of ensuring the stable operation of not only the heat exchanger-gasifier, but also the entire fuel supply system.

However, despite these drawbacks, only schemes with gasification and heating of hydrogen are considered at present, before it is fed into the combustion chamber. For LNG at this stage of work, a fuel supply scheme with a heat exchanger-gasifier is also adopted.

One of the main issues arising when designing a gasification system for cryogenic fuel is the choice of the location of the heat exchanger(Fig.2).

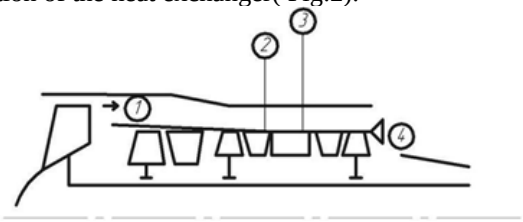

Figure 2 – Scheme of possible placement of heat exchanger-gasifier: 1 – at engine intake, 2 – beyond the compressor, 3 – in combustion chamber, 4 – beyond the low pressure turbine

There can be a lot of places to install it. For example, it is attractive to install a heat exchanger in the engine inlet diffuser. This we slightly reduce the air temperature at the inlet to the compressor and increase the efficiency of the thermodynamic cycle. However, in our opinion, there are much more shortcomings, and they overlap the advantages of this location of the heat exchanger:

• Low temperature of the incoming air flow will lead to the creation of a large heat exchange area, which will increase both the weight of the engine and the losses

Inlet pressure;

• There will necessarily be a large icing on the elements of the heat exchanger, to compensate for which it will be necessary to further develop the heat exchange area;

• Chipping of the formed ice can damage the compressor blades;

• Entry to an object can not only disable the heat exchanger, but also lead to a fire in the engine from the leakage of cryogenic fuel.

These disadvantages do not allow us to recommend this scheme. Installing the heat exchanger behind the compressor will require, due to small through-flow sections of compressed air, an increase in the engine's dimensions in this place, increase the pressure loss at the inlet to the combustion chamber. In addition, varying degrees of air cooling at different engine operating conditions can create unfavorable effects on the stability of the compressor. For the installation of the heat exchanger behind the compressor, a substantial alteration of the basic engine is necessary.

The scheme with the selection of air behind the compressor and its direction to the heat exchanger is more promising, but it requires re-dimensioning the compressor in order to increase the air flow through the selection. Heat exchangers in the combustion chamber and on the selection of combustion products, having relatively small dimensions and weight, significantly change the gas dynamics of the combustion chamber, worsen the specific fuel consumption and are constructively complex.

The most attractive is the scheme with a heat exchanger installed behind the low-pressure turbine. In this scheme, the heat exchanger has acceptable dimensions and weight, provides gasification and the necessary heating of hydrogen in all modes with a relatively small freezing of its surface from the combustion products. This gasification scheme with the location of the heat exchanger behind the turbine was adopted as the main one. Disadvantages of this scheme:

- Danger of burnout;
- Loss of exhaust gas pressure of the engine, which increases the specific fuel consumption;
- The need to ensure the heat exchanger's resistance to heat shocks, especially for two fuel engines in the case when the engine is running on kerosene and the heat exchanger is not filled with cryogenic fuel under pressure.

At the same time, this scheme is more reliable, since even in the event of a depressurization of the heat exchanger and the ignition of the escaping fuel, there will be no fire in the engine. The temperature of the heating exhaust gases is large enough not to increase the dimensions of the heat exchanger and clutter the exhaust path. The scheme does not require the alteration of the basic engine, that is, it is applicable to already finished structures. When developing and creating a gasification system for cryogenic fuel, the following problems arise:

• The creation of a reliable heat exchanger, which must be completely hermetic and durable in conditions of vibration and thermal shock characteristic of the place;

- Possible condensation of moisture and subsequent freezing of the heat exchanger;
- Choice of cryogenic fuel preheating;
- Ensuring gas-dynamic stability of the actual heat exchanger-gasifier and with the entire fuel supply system;
- Ensure minimum pressure loss in the case of exhaust gas flow around the heat exchanger.

The first problem is solved at the stage of designing the heat exchanger and represents a design task.

Further, this scheme was used to calculate characteristics of heat exchanger for LNG and hydrogen.

The results are shown in Table II and III.

TABLE II. THE GEOMETRIC PARAMETERS OF HEAT EXCHANGER FOR LNG.

Fuel rate [kg/s]		0,017	0,047	0,078	0,108
	Choice of geometric characteristics of the evaporator				
The tube numbers		6	17	28	39
Tube dimeter, m		0,004	0,004	0,004	0,004
Case diameter, m		0,22	0,61	1,01	1,4

TABLE III. THE GEOMETRIC PARAMETERS OF HEAT EXCHANGER FOR HYDROGEN.

Fuel rate [kg/s]		0,017	0,047	0,078	0,108
	Choice of geometric characteristics of the evaporator				
The tube numbers		5	12	19	27
Tube dimeter, m		0,004	0,004	0,004	0,004
Case diameter, m		0,185	0,44	0,69	0,98

As it can be seen the dimensional characteristics are acceptable for small-sized GTE.

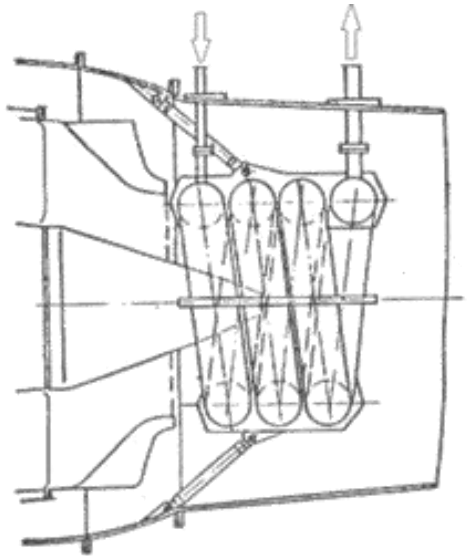

Figure 3 – The view of supposed heat exchanger

IV. SCHEME OF PROPOSED FUEL SUPPLY SYSTEM BASED ON CRYOGENIC FUEL

As a prototype of the engine it was decided to apply NK-88[6], which was developed at JSC Kuznetsov. This engine operated on cryogenic fuel - LNG. This is a fuel system with a cryogenic piston pump (PP) installed behind the turbine engine fuel and gas heat exchanger (GHE), a gas receiver (GR), a gas dosimeter (GD) regulation system and shut-off valve (SV). The system uses the LNG cooling resource to cool the engine oil and generators in two fuel-oil heat exchangers (FUHE).

The real fuel system is an upgrade of the previous system, in which a fuel dispenser was installed in a liquid line behind a centrifugal pump. Such a scheme had to be abandoned due to the impossibility of obtaining a stable operation of the control system due to the delay in gasification in heat exchangers and a long period of cooling down the centrifugal pump before launching.

The circuit with a receiver and a gas metering device allows the heat exchangers to be removed from the GTE control loop, removing the stability and speed problems, and the piston pump requires considerably less time for cooling down.

Fig. 4 shows the structural diagram of the fuel system with additional valves and heater mixer. The diagram does not show the valves, pump stall valves, drainage and filling the GD from the "cushion" of the cryogenic tank, as well as devices that are typical for such systems.

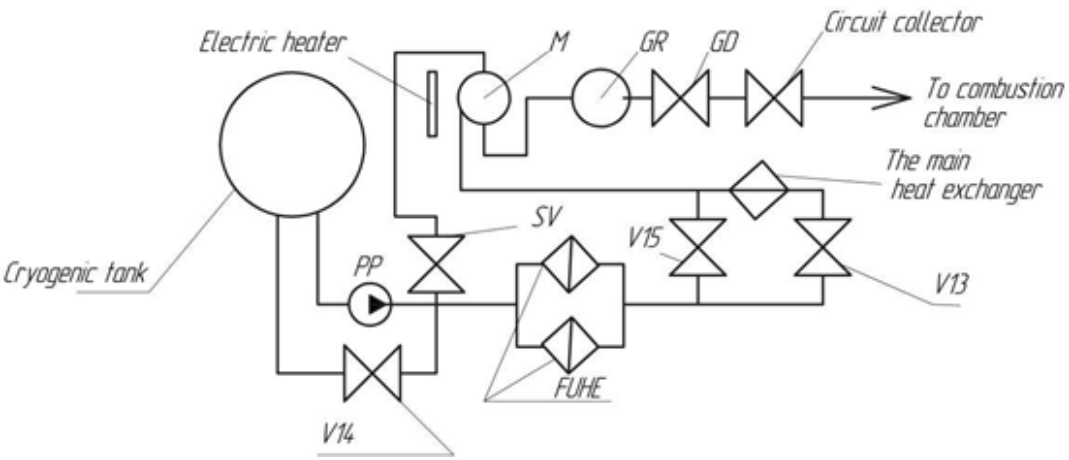

Figure 4 – Proposed scheme of fuel supply system

For the purpose of gasification of LNG during the filling of the receiver before the fuel is supplied to the combustion chamber (CC) of the engine, when there is no thermal source, a mixer (M) is used. At the beginning of the fuel system, such filling was accompanied by the injection of liquefied gas into the receiver. To prevent the liquid phase from entering the receiver, the heating of the mixer with a heating flexible cable was introduced. The mixer heating is switched on in preparation for start-up and turns off after starting the engine. Before running through the throttle valve (TV), the LNG is supplied to the mixer. When the gas is supplied to the combustion chamber of the engine, the SV is closed and all LNG passes through the FUHE, which ensures effective cooling of the oil. Before the end of the start-up, the gas from the main heat exchanger to the receiver is additionally heated in the mixer.

Between the outlet from the FUHE and the inlet to the TGT, a valve K13 is installed, which prevents the oil from freezing in FUHE during the pre-filling of the receiver. Starts with the "frozen" oil heat exchanger of the engine led to an increase in engine oil temperature to dangerous values. Such a phenomenon with the FUHE generator was not, because oil was pumped through it before launching. The V13 valve is opened on start-up before fuel is supplied to the engine.

V. Conclusions

This article shows the translation of a small-sized GTE from kerosene to cryogenic fuel. A comparison of cryogenic fuel types is proposed. The heat exchanger of a cryogenic fuel evaporator is calculated. The fuel supply system for a small-sized gas turbine engine has been selected and its prospects for use are shown.

References

[1] Pavlushenko, *Unmanned Aerial Vehicles: History, Application, Threat of Proliferation and Development Prospects*, edited by Human Rights, Moscow, 2005.

[2] V. V. Kulagin, "Theory, calculation and design of aircraft engines and power," edited by Mechanical Engineering, 2002 in press.

[3] I. Barmis, I. Kunis, *Liquefied Natural Gas Yesterday, Today, Tomorrow*, edited by MGTU Baumana, Moscoww, 2009 in press.

[4] B. Saynor, A. Bauen, M. Leach, *The Potential for Renewable Energy Sources in Aviation*, edited by Imperial college, London, 2003 in press.

[5] V. V. Malyshev, "Basic principles of the creation of aircraft power plants," in *Proc. the Conference Problems of the Use of Cryogenic Fuel*, Moscow, 1994.

[6] B. H. Orlov, E. V. Shakhmatov, A. I. Ivanov, I. P. Kositsyn, V. A. Bukin, A. G. Gimadiev, *Fuel Supply Systems and Regulation of Aviation GTE on Cryogenic Fuel*, edited by Samara Unversity, Samara, 2013

Dmitry Uglanov is a Associate Professor in the Department of Heat Engineering and Heat Engines, Samara National Research University named after Academician S.P. Korolev (Samara University), Russia, and conducts research in the areas of cryogenics, cold-energy systems, cooling systems and energy-saving problems of LNG using. Associate Professor Uglanov graduated as an engineer for laser systems and received Ph.D. at Samara University, Russia in 2003 and 2006, served as assistant of the Heat Engineering and Heat Engines till 2009. From 2009 till now he is Associate Professor in the Department of Heat Engineering and Heat Engines. He is also a Vice-Dean of Institute of Engine and Power Plant Engineering and Member-Correspondent of International Academy of Refrigeration. He has published more than 60 journal papers in his research fields.

Artem Novikov senior lecturer of heat engineering and heat engines department of Samara National Research University, Samara. Area of research: work processes of heat engines and refrigerators, heat and mass exchange, cryodynamics, cold energy

Daria Aksenova is a master-degree student of Samara National Research University, Samara. Area of research: work processes of heat engines and refrigerators, heat and mass exchange, cryodynamics, cold energy, CFD-calculation