On the Synthesis of Cylindrical Linear Rack Mechanisms

Emilia Abadjieva[1, 2]
[1]Faculty of Engineering Science, Akita University, Akita, Japan
Email: abadjieva@gipc.akita-u.ac.jp

Valentin Abadjiev[2]
[2]Institute of Mechanics, Bulgarian Academy of Sciences, Sofia, Bulgaria
Email: abadjiev@imbm.bas.bg

***Abstract*— The science of the gear mechanisms, which is an independent direction of "Applied Mechanics" covers two main scientific directions: theory of gearing and geometric theory of gear transmissions. The main tasks, which are solved by this direction of the science of the gear mechanisms are: development of adequate approaches to the synthesis and related to it generation of the active tooth surfaces of different types of gear mechanisms; choice of rational form of active tooth surfaces; creation of calculating methods for design and elaboration of innovative drives and etc. The current study is dedicated to the synthesis of one less studied class of spatial gear transmissions – cylindrical rack drives. This type of drives serves to transform the rotation of a cylindrical worm into translational displacement of a gear rack. An analytical dependencies, defining the basic geometric characteristics of this type three-link mechanisms, for the cases when the rotating link is a cylindrical worm, which active tooth surfaces are asymmetric cylindrical convolute, Archimedean and involute helicoids, are presented in the study. This motions transformer should be treated as a special case of spatial three-link rack drive, which rotating link is a convolute, Archimedean and involute worm with a constant axial pitch.**

***Index Terms*— rack drive, mathematical modeling, synthesis, cylindrical linear helicoid, action surface, region of mesh**

I. Introduction

The main purpose of each transmission mechanisms is to realize motions transformation upon a preliminary defined law with a necessary exactness. In the group of gear mechanisms, certain significance for the technique has spatial rack mechanisms, transforming motions of the type ($R \leftrightarrow T$) [1].

The reason for this is that, as a mechanical system, this type of gear sets does not have an alternative for cases of motions transformation at a big power, as an alternative for small power and displacements are the electric drives with electronic control. Hydraulic drives represent a definite alternative, but for the achievement of high positioning accuracy - high-tech and expensive servo systems are applied.

The non-orthogonal crossed placement of the rotation axis of one movable link towards the directrix of the rectilinear translation of the second movable link is a premise for existence of a greater number of free parameters. The search of suitable combinations among them, enables the possibility when the rack mechanisms are synthesized, to control the desired exploitation characteristics: increased reliability and durability; low vibration activity and noiseless and etc. Here, it will be mentioned that even a slight deviation from the orthogonal placement of the crossing of the specific motions axes of the movable links leads to increment of the overlap coefficient and hence of the increment of the gear loading capacity. As a rule, the positive technological and exploitation qualities of the gear mechanism are result of achieving an optimal correlation between their specific kinematic characteristics. This determines the prevailing kinematic character of the chosen approach to the synthesis and to the studied models also.

The successful implementation of spatial rack transmissions with new kinematic and strength characteristics into techniques is obstructed from the insufficient knowledge of the common principles of this transformation, due to the lack of offered specific approaches to the mathematical modeling oriented towards their synthesis.

The global structure of every mathematical model of the studied type gear mechanism is determined from [2]:

- The purpose of the three-link mechanism in terms of the defined law of motions transformation;
- Placement of the specific axes of the movable links and the type of conjugation of the Σ_i elements of high kinematic joints (point or linear tangent contact);
- The technological devices related to the choice of the geometry of the generating (instrumental) surfaces and the chosen principle of generation by T. Olivier.

Manuscript received June 17, 2018; revised August 11, 2018.

doi: 10.18178/ijmerr.7.5.544-551

Two approaches for generation of the tooth surfaces Σ_2 of the gear rack (link $i=2$) of the studied mechanism will be shown below:

- Σ_2 is generated through an enveloping in accordance with the second principle of T. Olivier; Σ_2 is generated (cut) by instrument J , which generating (enveloping) surfaces Σ_J are a geometrically identical with the tooth surfaces Σ_1 of the rotating link $i=1$, i.e. $\Sigma_J \equiv \Sigma_1$; the tool J occupies the same relative position towards the blank of the link $i=2$); the relative motion of the instrument J towards the blank of the link $i=2$ is the same as it is of the Σ_1 towards Σ_2 in condition of work meshing. Hence, the generated surfaces Σ_2 have a linear contact with Σ_1.
- Σ_2 is a cylindrical surface, for which it is easy to determine the analytical type of its normal section and that is the normal profile of the tooth of the gear rack. If the direction of the longitudinal line of the tooth and the geometry of its normal profile are known, then Σ_2 can be generated by copying. For this case too, Σ_1 and Σ_2 have a linear contact.

II. Study of the Geometry of the Cylindrical Rack Drives

A. Cylindrical Convolute Rack Drive

The study of this class rack drives is realized on the basis of the shown in Fig. 1 geometric scheme for generation of cylindrical convolute helicoids [1, 2] and on Fig. 2- in which a spatial rack mechanism with rotating cylindrical helicoids (cylindrical worm) is shown.

The process of these helical surfaces generation is considered in fixed co-ordinate system $S_p^{(j)}(O_p^{(j)}, x_p^{(j)}, y_p^{(j)}, z_p^{(j)})$ and it is as follows. The generatrix $L^{(j)}$ does not cross the axis $O_p^{(j)} z_p^{(j)}$ which coincides with the geometric axis of the gear. $L^{(j)}$ and $O_p^{(j)} z_p^{(j)}$ conclude an angle $0{,}5\pi < \xi^{(j)} < \pi$. At the same time, line $L^{(j)}$ belongs to plane $T^{(j)}$, which is tangential to directed circle cylinder $C^{(j)}$. The generation of the cylindrical convolute helicoid $\Sigma_1^{(j)}$ by the line $L^{(j)}$ is realized through axial helical motion with longitudinal axis $O_p^{(j)} z_p^{(j)}$ with parameter $p_s^{(j)} = constant$. It can be shown easily, that this type of helicoids should be treated as special cases of conic linear helicoids [1, 3, 4], when the cross parameter (tangent parameter) $p_t = 0$. Hence, they are linear helicoids with axial parameter $p^{(j)} = p_s^{(j)} = constant.$ Then, the cylindrical convolute helicoid is described by the vector equation:

$$\bar{\rho}_1^{(j)} = \bar{r}_0^{(j)} + \bar{s}^{(j)} + \bar{u}^{(j)}, \tag{1}$$

where $\bar{\rho}_1^{(j)}$ is a radius-vector of point $N^{(j)}$ from the cylindrical convolute helicoid $\Sigma_1^{(j)}$; $\bar{r}_0^{(j)}$ - radius-vector of the directed cylinder $C^{(j)}$; $\vartheta^{(j)}$, $u^{(j)}$ - coordinates of the helical surface $\Sigma_1^{(j)}$; $s^{(j)} = p_s^{(j)} \vartheta^{(j)}$ - axial displacement of the generatrix $L^{(j)}$.

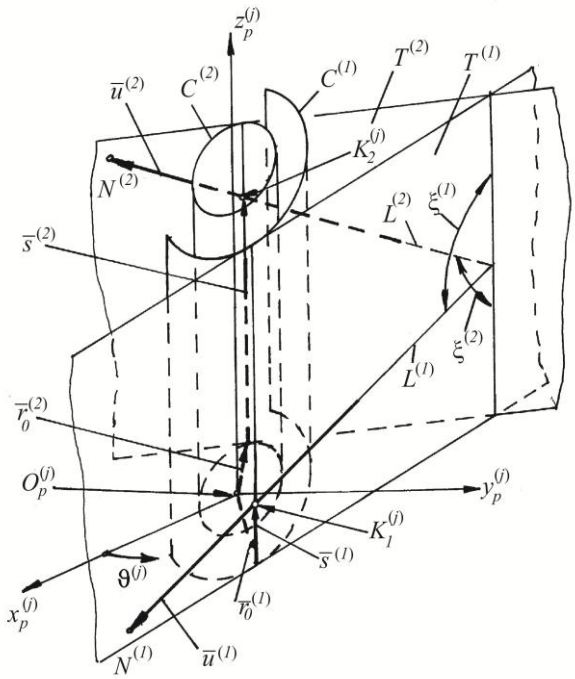

Figure 1. Generation of right-handed cylindrical convolute helicoid

When (1) is written in the co-ordinate system, $S_p^{(j)}(O_p^{(j)}, x_p^{(j)}, y_p^{(j)}, z_p^{(j)})$, then it is obtained:

$$\begin{aligned} x_p^{(j)} &= r_0^{(j)} \cos\vartheta^{(j)} \pm u^{(j)} \sin\xi^{(j)} \sin\vartheta^{(j)}, \\ y_p^{(j)} &= r_0^{(j)} \sin\vartheta^{(j)} \mp u^{(j)} \sin\xi^{(j)} \cos\vartheta^{(j)}, \\ z_p^{(j)} &= p_s^{(j)} \vartheta^{(j)} \pm u^{(j)} \cos\xi^{(j)}. \end{aligned} \tag{2}$$

When $U^{(j)} = u^{(j)} \sin\xi^{(j)} \neq 0$ is substituted in (2), then the system (2) has the following type:

$$\begin{aligned} x_p^{(j)} &= r_0^{(j)} \cos\vartheta^{(j)} \pm U^{(j)} \sin\vartheta^{(j)}, \\ y_p^{(j)} &= r_0^{(j)} \sin\vartheta^{(j)} \mp U^{(j)} \cos\vartheta^{(j)}, \\ z_p^{(j)} &= p_s^{(j)} \vartheta^{(j)} \mp U^{(j)} \cot\xi^{(j)}. \end{aligned} \tag{3}$$

The systems of equations (3), as well as (2), describe the pair of cylindrical convolute helicoids, which parameter of distribution is

$$h^{(j)} = p_s^{(j)} + r_0^{(j)} \cot\xi^{(j)} \tag{4}$$

The normal vectors to the cylindrical helical surfaces $\Sigma_1^{(j)}$ ($j=1,\ 2$) at their arbitrary point are illustrated by their corresponding scalar components:

$$\begin{aligned} n_{1,x_p}^{(j)} &= \mp h^{(j)} cos\vartheta^{(j)} - U^{(j)} cot\xi^{(j)} sin\vartheta^{(j)}, \\ n_{1,y_p}^{(j)} &= \mp h^{(j)} sin\vartheta^{(j)} + U^{(j)} cot\xi^{(j)} cos\vartheta^{(j)}, \\ n_{1,z_p}^{(j)} &= U^{(j)}. \end{aligned} \quad (5)$$

It is obvious from (5), that $\overline{n}_1^{(j)} \neq \overline{0}$ for each point from $\Sigma_1^{(j)}$ ($j=1,\ 2$). Hence, the cylindrical convolute helicoid has only ordinary points.

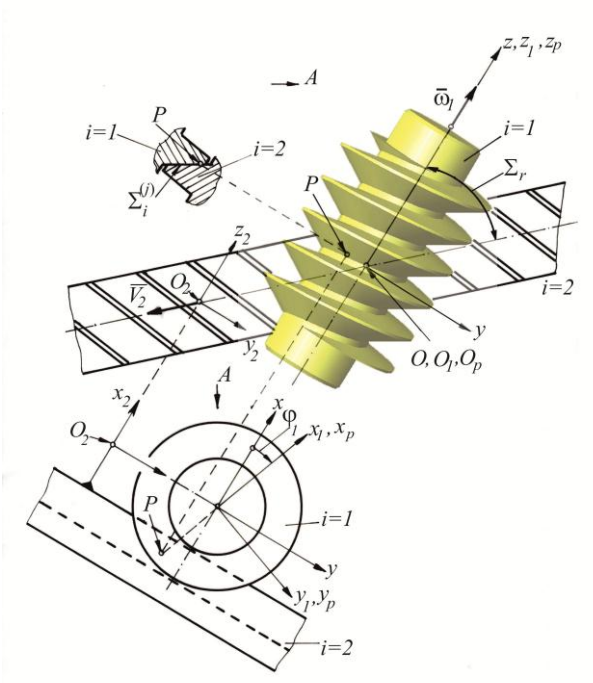

Figure 2. Geometric-kinematic scheme of spatial rack drive with rotating cylindrical helicoids

The most general type of the action surface/region of mesh of the rack mechanisms can be presented by the following equations system:

$$\begin{aligned} &\rho_s^{(j)} = M_{ss_p} \rho_{s_p}^{(j)}, \quad \rho_{s_p}^{(j)} = \rho_{s_p}^{(j)}(U^{(j)}, \vartheta^{(j)}), \\ &f(U^{(j)}, \vartheta^{(j)}, \varphi_1) = \overline{n}_{1,s} \overline{V}_{12} = 0, \\ &n_{1,s}^{(j)} = L_{ss_p} n_{1,s_p}^{(j)}, \end{aligned} \quad (6)$$

where $\rho_s^{(j)}$ is a column-matrix of the radius-vector $\overline{\rho}_s^{(j)}$ of an arbitrary point from cylindrical linear helicoids $\Sigma_1^{(j)}$ in the fixed co-ordinate system S; $\rho_{s_p}^{(j)}$ - column-matrix of the vector $\overline{\rho}_{s_p}^{(j)}$ of an arbitrary point from $\Sigma_1^{(j)}$ in its fixed co-ordinate system S_p of the helicoid; M_{ss_p} - 4x4 transition matrix from S_p into S; L_{ss_p} - 3x3 transition matrix from S_p into S; $U^{(j)}$, $\vartheta^{(j)}$ - independent coordinates of the helicoid $\Sigma_1^{(j)}$; φ_1 - parameter of meshing; $\overline{n}_{1,s}^{(j)}$ - normal vector at $\Sigma_1^{(j)}$ in arbitrary point; $n_{1,s}^{(j)}$ - column-matrix of $\overline{n}_{1,s}^{(j)}$, written in S; $n_{1,s_p}^{(j)}$ - column-matrix of $\overline{n}_{1,s_p}^{(j)}$, written in the co-ordinate system S_p; $\overline{V}_{12}$ - sliding velocity vector in arbitrary point from the mesh region of the rack drive.

For the case of convolute rack drive, the equation system, describing action surface/mesh region, obtains the following type [5 - 7]:

$$\begin{aligned} &\left\| \begin{matrix} x^{(j)} \\ y^{(j)} \\ z^{(j)} \\ 1 \end{matrix} \right\| = M_{ss_p} \left\| \begin{matrix} r_0^{(j)} \cos\vartheta^{(j)} \pm U^{(j)} \sin\vartheta^{(j)} \\ r_0^{(j)} \sin\vartheta^{(j)} \mp U^{(j)} \cos\vartheta^{(j)} \\ p_s \vartheta^{(j)} \pm U^{(j)} \cot\xi^{(j)} \\ 1 \end{matrix} \right\|, \\ &\frac{n_{1,y}^{(j)}}{n_{1,z}^{(j)}} = \frac{p_s - j_{21} \cos\Sigma_r}{j_{21} \sin\Sigma_r}, \end{aligned} \quad (7)$$

where $j_{21} = V_2 / \omega_1$ (V_2 is a magnitude of translation velocity $\overline{V}_2$, ω_1 - magnitude of angular velocity $\overline{\omega}_2$, see Fig. 2).

$$\left\| \begin{matrix} n_{1,x}^{(j)} \\ n_{1,y}^{(j)} \\ n_{1,z}^{(j)} \end{matrix} \right\| = L_{ss_p} \left\| \begin{matrix} \mp h^{(j)} \cos\vartheta^{(j)} - U^{(j)} \cot\xi^{(j)} \sin\vartheta^{(j)} \\ \mp h^{(j)} \sin\vartheta^{(j)} + U^{(j)} \cot\xi^{(j)} \cos\vartheta^{(j)} \\ U^{(j)} \end{matrix} \right\|$$

$$M_{ss_p} = \left\| \begin{matrix} \cos\varphi_1 & -\sin\varphi_1 & 0 & 0 \\ \sin\varphi_1 & \cos\varphi_1 & 0 & 0 \\ 0 & 0 & 1 & 0 \\ 0 & 0 & 0 & 1 \end{matrix} \right\|; \quad (8)$$

$$L_{ss_p} = \left\| \begin{matrix} \cos\varphi_1 & -\sin\varphi_1 & 0 \\ \sin\varphi_1 & \cos\varphi_1 & 0 \\ 0 & 0 & 1 \end{matrix} \right\|$$

$$h^{(j)} = p_s + r_0^{(j)} \cot\xi^{(j)}, \quad U^{(j)} = u^{(j)} \sin\xi^{(j)} \neq 0,$$

where $h^{(j)}$ is a parameter of distribution of the cylindrical convolute helicoid.

For the action surface of spatial convolute rack drive, after a calculation, it is obtained:

$$
\begin{aligned}
&x^{(j)} = r_0^{(j)}\cos(\vartheta^{(j)}+\varphi_1) \pm U^{(j)}\sin(\vartheta^{(j)}+\varphi_1),\\
&y^{(j)} = r_0^{(j)}\sin(\vartheta^{(j)}+\varphi_1) \mp U^{(j)}\cos(\vartheta^{(j)}+\varphi_1),\\
&z^{(j)} = p_s\vartheta^{(j)} \pm U^{(j)}\cot\xi^{(j)}\\
&\frac{\mp h^{(j)}\sin(\vartheta^{(j)}+\varphi_1)+U^{(j)}\cot\xi^{(j)}\cos(\vartheta^{(j)}+\varphi_1)}{U^{(j)}} =\\
&= \frac{p_s - j_{21}\cos\Sigma_r}{j_{21}\sin\Sigma_r}.
\end{aligned} \tag{9}
$$

The tooth surfaces $\Sigma_2^{(j)}$ of the gear rack of these types rack mechanisms are determined by the system of equations:

$$
\begin{Vmatrix} x_2^{(j)} \\ y_2^{(j)} \\ z_2^{(j)} \\ 1 \end{Vmatrix} = M_{s_2 s} \begin{Vmatrix} x^{(j)} \\ y^{(j)} \\ z^{(j)} \\ 1 \end{Vmatrix}, \quad \frac{n_{1,y_2}^{(j)}}{n_{1,z_2}^{(j)}} = \frac{p_s - j_{21}\cos\Sigma_r}{j_{21}\sin\Sigma_r}, \tag{10}
$$

where

$$
M_{s_2 s} = \begin{Vmatrix} 1 & 0 & 0 & 0 \\ 0 & 1 & 0 & j_{21}\varphi_1\sin\Sigma_r \\ 0 & 0 & 1 & j_{21}\varphi_1\cos\Sigma_r \\ 0 & 0 & 0 & 1 \end{Vmatrix}, \tag{11}
$$

$$
\begin{Vmatrix} n_{1,x_2}^{(j)} \\ n_{1,y_2}^{(j)} \\ n_{1,z_2}^{(j)} \end{Vmatrix} = L_{s_2 s} \begin{Vmatrix} n_{1,x}^{(j)} \\ n_{1,y}^{(j)} \\ n_{1,z}^{(j)} \end{Vmatrix}, \quad L_{s_2 s} = E_{3x3}.
$$

When (11) is substituted in (10), the following system is obtained:

$$
\begin{aligned}
&x_2^{(j)} = x^{(j)} = r_0^{(j)}\cos(\vartheta^{(j)}+\varphi_1) \pm U^{(j)}\sin(\vartheta^{(j)}+\varphi_1),\\
&y_2^{(j)} = y^{(j)} + j_{21}\varphi_1.\sin\Sigma_r = r_0^{(j)}\sin(\vartheta^{(j)}+\varphi_1) \mp\\
&\mp U^{(j)}\cos(\vartheta^{(j)}+\varphi_1) + j_{21}\varphi_1.\sin\Sigma_r,\\
&z_2^{(j)} = z^{(j)} + j_{21}\varphi_1.\cos\Sigma_r =\\
&= p_s\vartheta^{(j)} \pm U^{(j)}\cot\xi^{(j)} + j_{21}\varphi_1.\cos\Sigma_r,\\
&\frac{\mp h^{(j)}\sin(\vartheta^{(j)}+\varphi_1)+U^{(j)}\cot\xi^{(j)}\cos(\vartheta^{(j)}+\varphi_1)}{U^{(j)}} =\\
&= \frac{p_s - j_{21}\cos\Sigma_r}{j_{21}\sin\Sigma_r}.
\end{aligned} \tag{12}
$$

On Fig. 3 [1] the generated cylindrical convolute helicoids $\Sigma_1^{(j)}$ $(j=1,\ 2)$ of the rotating link $i=1$; the mesh regions $MR^{(j)}$ $(j=1,\ 2)$ of the cylindrical convolute rack drive and the tooth surfaces $\Sigma_2^{(j)}$ $(j=1,\ 2)$ of the link $i=2$, realizing rectilinear translation are software illustrated.

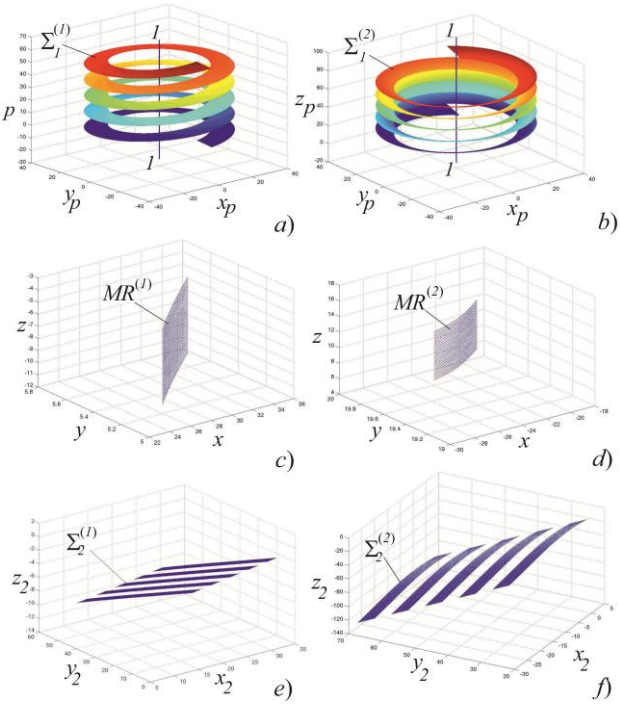

Figure 3. Spatial cylindrical convolute rack mechanism with velocity ratio $j_{21}=2{,}29$ mm/rad and with number of teeth $z_1=1$: a) cylindrical convolute right-hand helicoid $\Sigma_1^{(1)} \Rightarrow \xi^{(1)}=98^\circ$, $r_0^{(1)}=4{,}15$ mm, $u^{(1)}\in[24{,}03-35{,}34]$, $\vartheta^{(1)}\in[0-10\pi]$; b) $\Sigma_1^{(2)} \Rightarrow \xi^{(2)}=120^\circ$, $r_0^{(2)}=17{,}68$ mm; $u^{(2)}\in[24{,}03-35{,}34]$, $\vartheta^{(2)}\in[0-10\pi]$; c) mesh region $MR^{(1)}$; d) $MR^{(2)}$ e) surfaces $\Sigma_2^{(1)}$ conjugated with $\Sigma_1^{(1)}$; f) surfaces $\Sigma_2^{(2)}$ conjugated with $\Sigma_1^{(2)}$

B. *Cylindrical Archimedean Rack Drive*

The system of equations, describing analytically the cylindrical Archimedean helicoids, is obtained from (3), after substituting $r_0^{(j)}=0$ [1, 2]:

$$
\begin{aligned}
n_{1,x_p}^{(j)} &= \mp p_s^{(j)}\cos\vartheta^{(j)} - U^{(j)}\cot\xi^{(j)}\sin\vartheta^{(j)},\\
n_{1,y_p}^{(j)} &= \mp p_s^{(j)}\sin\vartheta^{(j)} + U^{(j)}\cot\xi^{(j)}\cos\vartheta^{(j)},\\
n_{1,z_p}^{(j)} &= U^{(j)}.
\end{aligned} \tag{13}
$$

Analogically, by substituting $h^{(j)}=p_s$ (for $r_0^{(j)}=0$) in the system (5) for the coordinates of the normal vector at any point of the cylindrical Archimedean helicoid, it is obtained:

$$
\begin{aligned}
n_{1,x_p}^{(j)} &= \mp p_s^{(j)}\cos\vartheta^{(j)} - U^{(j)}\cot\xi^{(j)}\sin\vartheta^{(j)},\\
n_{1,y_p}^{(j)} &= \mp p_s^{(j)}\sin\vartheta^{(j)} + U^{(j)}\cot\xi^{(j)}\cos\vartheta^{(j)},\\
n_{1,z_p}^{(j)} &= U^{(j)}.
\end{aligned} \tag{14}
$$

The system of equations (14) shows unequivocally, that the cylindrical Archimedean helicoid is composed only of ordinary points, because $\bar{n}_1^{(j)} \neq \bar{0}$.

The analytical description of the action surface of the cylindrical Archimedean rack drive is received from the equations system (9), when there $r_0^{(j)} = 0$ and $h^{(j)} = p_s$ are substituted correspondingly, i.e.:

$$\begin{aligned} x^{(j)} &= \pm U^{(j)} \sin(\vartheta^{(j)} + \varphi_1), \\ y^{(j)} &= \mp U^{(j)} \cos(\vartheta^{(j)} + \varphi_1), \\ z^{(j)} &= p_s \vartheta^{(j)} \pm U^{(j)} \cot \xi^{(j)} \\ &\frac{\mp p_s \sin(\vartheta^{(j)} + \varphi_1) + U^{(j)} \cot \xi^{(j)} \cos(\vartheta^{(j)} + \varphi_1)}{U^{(j)}} = \\ &= \frac{p_s - j_{21} \cos \Sigma_r}{j_{21} \sin \Sigma_r}. \end{aligned} \tag{15}$$

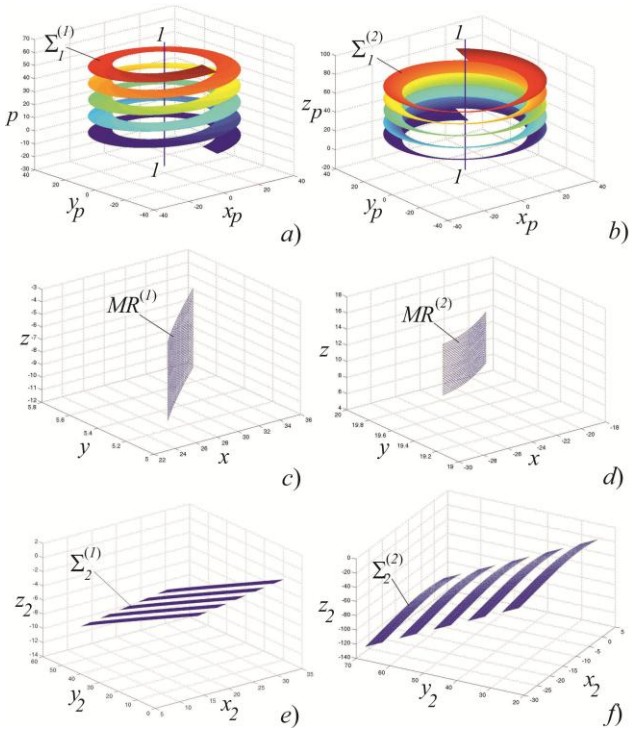

Figure 4. Spatial cylindrical Archimedean rack drive with velocity ratio $j_{21} = 2{,}29$ mm/rad and with number of teeth $z_1 = 1$: a) cylindrical Archimedean right-hand helicoid $\Sigma_1^{(1)} \Rightarrow \xi^{(1)} = 98^\circ$, $u^{(1)} \in [24{,}03 - 35{,}34]$, $\vartheta^{(1)} \in [0 - 10\pi]$; b) $\Sigma_1^{(2)} \Rightarrow \xi^{(2)} = 120^\circ$, $u^{(2)} \in [24{,}03\text{-}35{,}34]$, $\vartheta^{(2)} \in [0 - 10\pi]$; c) mesh region $MR^{(1)}$; d) $MR^{(2)}$; e) surfaces $\Sigma_2^{(1)}$ conjugated with $\Sigma_1^{(1)}$; f) surfaces $\Sigma_2^{(2)}$ conjugated with $\Sigma_1^{(2)}$

The active tooth surfaces $\Sigma_2^{(j)}$ of the gear rack are obtained from the system (12) after a substituting in it $r_0^{(j)} = 0$ and the parameter of meshing $h^{(j)} = p_s$ correspondingly:

$$\begin{aligned} x_2^{(j)} &= \pm U^{(j)} \sin(\vartheta^{(j)} + \varphi_1), \\ y_2^{(j)} &= \mp U^{(j)} \cos(\vartheta^{(j)} + \varphi_1) + j_{21} \varphi_1 . \sin \Sigma_r, \\ z_2^{(j)} &= p_s \vartheta^{(j)} \pm U^{(j)} \cot \xi^{(j)} + j_{21} \varphi_1 . \cos \Sigma_r, \\ &\frac{\mp p_s \sin(\vartheta^{(j)} + \varphi_1) + U^{(j)} \cot \xi^{(j)} \cos(\vartheta^{(j)} + \varphi_1)}{U^{(j)}} = \\ &= \frac{p_s - j_{21} \cos \Sigma_r}{j_{21} \sin \Sigma_r}. \end{aligned} \tag{16}$$

On Fig. 4 [1] the generated cylindrical Archimedean helicoids $\Sigma_1^{(j)}$ $(j = 1,\ 2)$, representing the active tooth surfaces of the rotating link $i = 1$; the mesh regions $MR^{(j)}$ $(j = 1,\ 2)$ of the cylindrical Archimedean rack drive and the tooth surfaces $\Sigma_2^{(j)}$ $(j = 1,\ 2)$ of the link $i = 2$, realizing rectilinear translation [1] are graphically illustrated.

The spatial non-orthogonal Archimedean rack mechanism, realized by a partial application of 3D software technology [8, 9] is shown on Fig. 5.

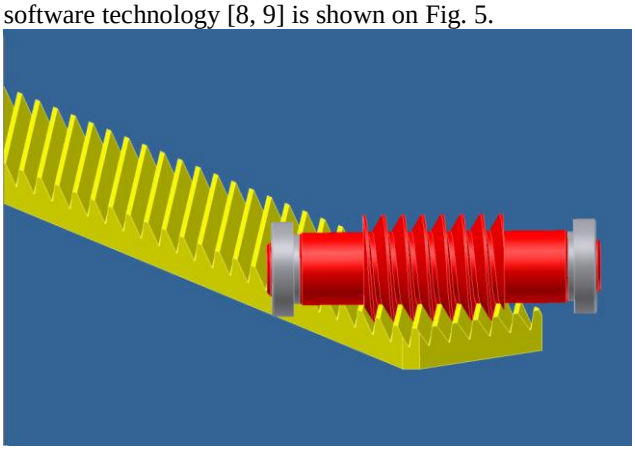

Figure 5. Spatial non-orthogonal cylindrical Archimedean rack mechanism

C. Cylindrical Involute Rack Drive

The systems of equations (2) and (3) describe cylindrical involute helicoid, for which the condition of development of linear surface is fulfilled [2]:

$$h^{(j)} = p_s^{(j)} + r_0^{(j)} \cot \xi^{(j)} = 0. \tag{17}$$

The normal vector to the cylindrical involute helicoid is described by the system of equations

$$\begin{aligned} n_{1,x_p}^{(j)} &= -U^{(j)} cot \xi^{(j)} sin \vartheta^{(j)}, \\ n_{1,y_p}^{(j)} &= +U^{(j)} cot \xi^{(j)} cos \vartheta^{(j)}, \\ n_{1,z_p}^{(j)} &= U^{(j)}. \end{aligned} \tag{18}$$

The system of equations (18) shows that if the condition $U^{(j)} = u^{(j)} \sin \xi^{(j)} = 0$ is fulfilled, then the $\bar{n}_1^{(j)} = \bar{0}$ $(j = 1,\ 2)$. Hence, these points from cylindrical involute helicoids are undercutting points.

The points, which fulfill the above condition, are contact points between the generatrix $L^{(j)}$ and the basic cylinder, which radius is $r_0^{(j)}$. These points shouldn't belong to the active tooth surfaces of the cylindrical involute worm.

From the equations system (9), for the action surface of cylindrical involute rack drive, after a substitution $h^{(j)} = 0$ it is obtained [1]:

$$\begin{aligned} x^{(j)} &= r_0^{(j)} \cos(\vartheta^{(j)} + \varphi_1) \pm U^{(j)} \sin(\vartheta^{(j)} + \varphi_1), \\ y^{(j)} &= r_0^{(j)} \sin(\vartheta^{(j)} + \varphi_1) \mp U^{(j)} \cos(\vartheta^{(j)} + \varphi_1), \\ z^{(j)} &= p_s \vartheta^{(j)} \pm U^{(j)} \cot\xi^{(j)} \\ U^{(j)} \cot\xi^{(j)} \cos(\vartheta^{(j)} + \varphi_1) &= \\ &= \frac{p_s - j_{21} \cos\Sigma_r}{j_{21} \sin\Sigma_r}. \end{aligned} \tag{19}$$

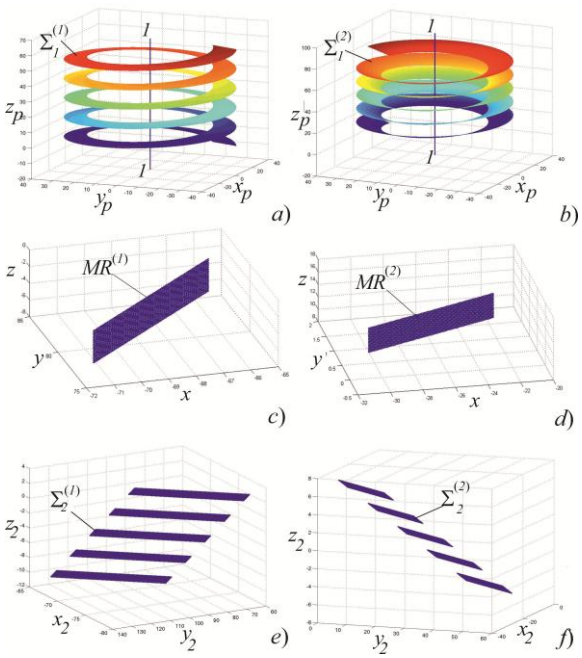

Figure 6. Spatial cylindrical involute rack drive with velocity ratio $j_{21} = 2{,}29$ mm/rad and with tooth number $z_1 = 1$: a) cylindrical involute right hand helicoid $\Sigma_1^{(1)} \Rightarrow \xi^{(1)} = 98^\circ$, $r_0^{(1)} = 14{,}23$ mm; $u^{(1)} \in [24{,}03 - 35{,}34]$, $\vartheta^{(1)} \in [0 - 10\pi]$; b) $\Sigma_1^{(2)} \Rightarrow \xi^{(2)} = 120^\circ$, $r_0^{(2)} = 3{,}46$ mm; $u^{(2)} \in [24{,}03 - 35{,}34]$, $\vartheta^{(2)} \in [0 - 10\pi]$; c) mesh region $MR^{(1)}$; d) $MR^{(2)}$; e) surfaces $\Sigma_2^{(1)}$ conjugated with $\Sigma_1^{(1)}$; f) surfaces $\Sigma_2^{(2)}$ conjugated with $\Sigma_1^{(2)}$

When the equations system (19) is written in the co-ordinate system S_2, connected with the link $i = 2$, the active tooth surfaces $\Sigma_2^{(j)}$ of the spatial involute rack mechanism are as follow:

$$\begin{aligned} x_2^{(j)} &= r_0^{(j)} \cos(\vartheta^{(j)} + \varphi_1) \pm U^{(j)} \sin(\vartheta^{(j)} + \varphi_1), \\ y_2^{(j)} &= r_0^{(j)} \sin(\vartheta^{(j)} + \varphi_1) \mp U^{(j)} \cos(\vartheta^{(j)} + \varphi_1) + \\ &+ j_{21} \varphi_1 \sin\Sigma_r, \\ z_2^{(j)} &= p_s \vartheta^{(j)} \pm U^{(j)} \cot\xi^{(j)} + j_{21} \varphi_1 \cos\Sigma_r, \\ U^{(j)} \cot\xi^{(j)} \cos(\vartheta^{(j)} + \varphi_1) &= \frac{p_s - j_{21} \cos\Sigma_r}{j_{21} \sin\Sigma_r}. \end{aligned} \tag{20}$$

On Fig. 6 the generated cylindrical involute helicoids $\Sigma_1^{(j)}$ $(j = 1,\ 2)$, representing the active tooth surfaces of the rotating link $i = 1$, mesh regions $MR^{(j)}$ $(j = 1,\ 2)$ of the cylindrical involute rack drive and the tooth surfaces $\Sigma_2^{(j)}$ $(j = 1,\ 2)$ of link $i = 2$, which performs rectilinear translation are graphically illustrated.

III. Analysis of the Geometry of Action Surface of Cylindrical Rack Mechanism

An analytical approach that defines the geometric character of the action surface of cylindrical rack drive will be presented in this part of the article. Here and further the study will treat only spatial rack mechanisms, which rotating links have linear helicoids [1].

Let, the system (9), describing parametrically the action surface of the cylindrical convolute rack mechanism, is presented in the form:

$$\begin{aligned} x &= r_0 \cos\theta \pm U \sin\theta, \\ y &= r_0 \sin\theta \mp U \cos\theta, \\ z &= p_s \vartheta \pm U \cot\xi, \\ U &= \pm \frac{h \sin\theta}{\cot\xi \cos\theta - A}, \end{aligned} \tag{21}$$

where $\theta = \vartheta + \varphi_1$, $A = \dfrac{p_s - j_{21} \cos\Sigma_r}{j_{21} \sin\Sigma_r} = constant$.

In equations (21), the above indexes of all the symbols are omitted.

U is substituted in the first equation of (21) and it is received:

$$x = r_0 \cos\theta + \frac{h \sin^2\theta}{\cot\xi \cos\theta - A} \tag{22}$$

After a substitution of $\cos\theta = t$ the obtained result is a quadratic equation regarding to t:

$$(r_0 \cot\xi - h)t^2 - (Ar_0 + \cot\xi . x)t + (Ax + h) = 0 \tag{23}$$

The solution of (23) is of the type:

$$t_{1,2} = P_1(x) \pm \sqrt{P_2(x)}, \tag{24}$$

where $P_i(x)$ $(i = 1,\ 2)$ are polynomials of i degree, i.e.:

$$P_1(x)=\frac{Ar_0+\cot\xi.x}{2(r_0\cot\xi-h)},$$
$$P_2(x)=\left[\frac{Ar_0+\cot\xi.x}{2(r_0\cot\xi-h)}\right]^2-\frac{(A.x+h)}{r_0\cot\xi-h}. \quad (25)$$

Let, the first equation (21) is multiplied with $\cos\theta$, the second one – with $\sin\theta$ and they are summed. Then:

$$x\cos\theta+y\sin\theta=r_0 \quad (26)$$

After substituting (24) into (26), it is obtained:

$$x\left[P_1(x)\pm\sqrt{P_2(x)}\right]+$$
$$+y.\sqrt{1-\left[P_1(x)\pm\sqrt{P_2(x)}\right]^2}=r_0 \quad (27)$$

Let, the curvilinear coordinate ϑ is determined by the third equation of (21):

$$\vartheta=\frac{z\mp U\cot\xi}{p_s}.$$

Then $\theta=\dfrac{z\mp u\cos\xi}{p_s}+\varphi_1=f(z,u,\varphi_1)$.

When $\cos\theta=\cos\left[f(z,u,\varphi_1)\right]=t$ is substituted and when the quadratic equation (23) is solved regarding t, the following two solutions - t_1 and t_2 (as a function of x) are obtained. Substituting $\cos\left[f(z,u,\varphi_1)\right]=t$ and $\sin\left[f(z,u,\varphi_1)\right]=\sqrt{1-t^2}$ into (26), equation (27) is received. The equation (27), that describes analytically the mesh region of cylindrical convolute rack drive, is an equation of cylindrical surface with generatrix parallel to the z-axis Oz of the fixed coordinate system $S(O,x,y,z)$.

For the cylindrical Archimedean rack mechanism, the polynomials $P_i(x)$ ($i=1,\ 2$) are received, when $r_0=0$ and $h=p_s$ are substituted in (25). Then

$$P_1(x)=-\frac{x.\cot\xi}{2p_s},$$
$$P_2(x)=\left[\frac{x.\cot\xi}{2p_s}\right]^2+\frac{A.x+p_s}{p_s}, \quad (28)$$

and equation (27) is of the type:

$$x\left[P_1(x)\pm\sqrt{P_2(x)}\right]+$$
$$+y.\sqrt{1-\left[P_1(x)\pm\sqrt{P_2(x)}\right]^2}=0 \quad (29)$$

The action surface of cylindrical involute rack mechanisms is obtained from (21), when it is substituted $h=0$, i.e.:

$$x=r_0\cos\theta\pm U\sin\theta,$$
$$y=r_0\sin\theta\mp U\cos\theta,$$
$$z=p_s\vartheta\pm U\cot\xi,$$
$$U(\cot\xi\cos\theta-A)=0. \quad (30)$$

From the fourth equation (30), it is received:

$$\cos\theta=\frac{A}{\cot\xi},\quad \sin\theta=\sqrt{1-\left(\frac{A}{\cot\xi}\right)^2}. \quad (31)$$

Then from (30) it is obtained

$$A.x+\sqrt{\cot^2\xi-A^2y}-r_0\cot\xi=0. \quad (32)$$

The equation (29) is an equation of cylindrical surface with generatrix parallel to z-axis Oz of the fixed coordinate system S. The equation (32) is an equation of a plane parallel to the axis Oz.

IV. Conclusion

The study, shown in this paper, presents to the specialists and designers of gear transmissions a new computing method, applicable to the synthesis of spatial cylindrical convolute, Archimedean and involute rack mechanisms. The offered algorithms are thematically related not only to the synthesis and design of the treated gear systems, but also offer an analytical approach to researchers, which can be used for analysis of the basic geometric characteristics of these motions transformers.

It is necessary to be mentioned, that the studied mechanical transmissions are characterized with high accuracy, smoothness, noiseless and high loading capacity, when the transformation of rotations into rectilinear translations are realized. The reason for this is that these classes of transmissions are kinematically conjugated and have large number of linear contacting active tooth surfaces, generated in accordance with the second principle of the French geometer T. Olivier.

References

[1] V. Abadjiev, "Theory and technical applications of hyperboloid mechanisms," Sc. D. dissertation, Institute of Mechanics, Bulgarian Academy of Sciences, Sofia, Bulgaria, 2007, (in Bulgarian).

[2] E. Abadjieva, "Mathematical models of the kinematic processes in spatial rack mechanisms and their application," Ph. D dissertation, Institute of Mechanics – Bulgarian Academy of Sciences, Sofia, Bulgaria, 2010, (in Bulgarian).

[3] E. Abadjieva and V. Abadjiev, "Regular mechanical transformation of rotations into translations: Part 1. Kinematic analysis and definition of the basic characteristics," *JTAM*, vol. 47, No 1, pp. 77-97, 2017.

[4] E. Abadjieva and V. Abadjiev, "Regular mechanical transformation of rotations into translations: Part 2. Kinematic synthesis of the elements of high kinematic joints, realizing the process of motions transformations," *JTAM*, vol. 47, No 3, pp. 3-24, 2017.

[5] F. Litvin and Al. Fuentes, *Gear Geometry and Applied Theory*, 2nd Ed., Cambridge University Press, Cambridge, New York, Melbourne, Madrid, Cape Town, Singapore, Sau Paulo, Delhi, Tokyo, Mexico City, 2004, p.800.

[6] F. Litvin, *Geometry and Applied Theory*, PTR Prentice Hall, A Paramount Communication Company, Englewood Eliffs, New Jersey 07632, 1994, p. 724.
[7] G. Kovatchev and V. Abadjiev, "On the synthesis of spatial rack mechanisms," in *Proc. 6-th National Congress of Theoretical and Applied Mechanics*, Varna, 1, 1990, pp. 35-38, (in Russian).
[8] E. Abadjieva, V. Abadjiev and D. Ignatova, 3D software technology, applicable in elaboration of the spatial face gear drives for incorporation into robot systems, *World Journal of Engineering and Technology*, [Online], 4, pp. 91-99, 2016, Available: http://www.scirp.org/Journal/PaperInformation.aspx?PaperID=71329
[9] E. Abadjieva and V. Abadjiev, "On the synthesis of spatial rack mechanisms: Mathematical modelling, analytical and 3D software creating of the face rack drive teeth," *Machine Design*, vol. 7, No 2, Faculty of Technical Science, University of Novi Sad, pp. 2015, 47-54.

Emilia V. Abadjieva, born in city of Sofia, Bulgaria.
Education and training: December 2014 – October 2015, Post. Doctoral Research in Department„ Scientific Calculations" Institute of Information and Communication Technologies-Bulgarian Academy of Sciences, Sofia, Bulgaria - Project „AComIn: Advanced Computing for Innovations „FP7-REGPOT-2012-2013-1, Grant 316087
2012 -2014 -Post. Doctoral Research Grant in Gifu University - Japan
2012 - Associate Professor in the field of - 01.02.02 „Applied Mechanics", Institute of Mechanics, Bulgarian Academy of Sciences, Sofia, Bulgaria
2010, PhD, Institute of Mechanics, Bulgarian Academy of Sciences
1998, Master of Science of Applied Mathematics, Faculty of Mathematics and Informatics, Sofia University, Sofia, Bulgaria
1998, Master of Science of Pedagogics, Faculty of Mathematics and Informatics, Sofia University, Sofia, Bulgaria
Work Experience:
March 1998 - Researcher and Associate Professor, Department "Mechatronic", Institute of Mechanics, Bulgarian Academy of Sciences, Sofia, Bulgaria
November 2015 - Researcher, Associate Professor and Lecturer, Faculty of Engineering Science , Graduate School of Engineering Science, Akita University, Akita, Japan
December 2014- October 2015, Researcher and Associate Professor, Participation in Project "AComIn –Advanced Computing for Innovations", Institute of Information and Communication Technologies, Bulgarian Academy of Sciences, Sofia, Bulgaria
September 2000- September 2004, Lecturer of Computer Networks and Internet Application, Education Centre, Faculty of Economic, Sofia University, Sofia, Bulgaria
Published Articles:
V. Abadjiev and E. Abadjieva, "Geometric pitch configurations – basic primitives of the mathematical models for the synthesis of hyperboloid gear drives", Advanced Gear Engineering, Mechanism and Machine Science 51, Springer International Publishing, Switzerland, 2018, pp. 91-117.
E. Abadjieva, V. Abadjiev, H. Kawazaki and T. Mouri, "On the synthesis of hyperboloid gears and technical application", in Proc. of the ASME 2013 International Power Transmission and Gearing Conference, Portland, Oregon, USA on August 4-7, 2013 (published on CD)
V. Abadjiev, E. Abadjieva and D. Petrova, "Synthesis of hyperboloid gear sets based on the pitch point approach", *Journal Mechanism and Machine Theory*, vol. 55, Pergamon, USA, 2012, pp. 51-66, doi:10.1016/j.mechmachtheory.2012.04.007)
Membership: Assoc. Prof. Dr. Mag. Mech. Abadjieva - ASME (American Society of Mechanical Engineers), 2011

Valentin I. Abadjiev, born in city of Razgrad, Bulgaria.
Education and training: 2007, Doctor of Sciences of "*Applied Mechanics"*, Institute of Mechanics, Bulgarian Academy of Sciences;
1988 - Assoc. Prof. Institute of Mechanics, Sofia, Bulgaria;
1983 – 1988, Assistant Professor I degree, Institute of Mechanics;
1985, Ph.D. in Applied Mechanics, Institute of Mechanics, Bulgarian Academy of Sciences, Sofia, Bulgaria;
1973 – 1983, Assistant Professor III degree - I degree, Institute of Motors and Cars, Sofia, Bulgaria;
1970, M. Sc. in Mechanical Engineering University of Rousse. Bulgaria.
Work Experience:
2015- Associated Professor Institute of Mechanics, Sofia, Bulgaria
1988- 2014, Professor and Researcher, Institute of Mechanics, Sofia, Bulgaria
2008 – 2010, Head of Multibody System Mechanics Department, Institute of Mechanics, Sofia, Bulgaria
1988 - 2008, Assoc. Prof. (applied mechanics), Institute of Mechanics, Sofia, Bulgaria
1970-1972, Military Experience, Bulgaria
Published Articles:
V. Abadjiev and E. Abadjieva, "Geometric pitch configurations – basic primitives of the mathematical models for the synthesis of hyperboloid gear drives", Advanced Gear Engineering, Mechanism and Machine Science 51, Springer International Publishing, Switzerland, 2018, pp. 91-117.
E. Abadjieva, V. Abadjiev, H. Kawazaki and T. Mouri, "On the synthesis of hyperboloid gears and technical application", in Proc. of the ASME 2013 International Power Transmission and Gearing Conference, Portland, Oregon, USA on August 4-7, 2013 (published on CD)
V. Abadjiev, E. Abadjieva and D. Petrova, "Synthesis of hyperboloid gear sets based on the pitch point approach", *Journal Mechanism and Machine Theory*, vol. 55, Pergamon, USA, 2012, pp. 51-66, doi:10.1016/j.mechmachtheory.2012.04.007)
Professional Interest: Applied mechanics; Spatial gearing; Mathematical modelling (for synthesis of skew-axes gears and for reconstruction of car crashes)
Membership: Union of Bulgarian Mathematicians (section Mechanics); Union of Technical Society; Union of Bulgarian Scientist; Union of Bulgarian Standardization
Awards:

- Diploma of Scientific Union in Bulgaria for high scientific achievement for 2004 in the technical science area;
- Honor Diploma from National Science Fund for Research Achievements During the Eight National Session of National Science Fund, 1998-2001;
- Honor Diploma from National Science Fund for Research Achievements During the Third National Session of National Science Fund, 1993-1996;
- Diploma of Science-Technical Union of Engineering at Federation of Scientific-Technical Union of Mechanical Engineering to register as "Mechanical Engineer for 2006"
- Golden Medal of Federation of Scientific-Technical Union of Mechanical Engineering, 2006;
- Statuette of Ikar and register into a Golden book of Inventors in Bulgaria, 2005;
- Medal "Honorable Inventor", 1987;