Template-Based Modelling of Structural Components

Paul Christoph Gembarski, Haibing Li, and Roland Lachmayer
Institute of Product Development, Leibniz University Hannover, Hannover, Germany
Email: {gembarski, li, lachmayer}@ipeg.uni-hannover.de

***Abstract* — This article reflects a template-based design approach for modelling the design solution space of structural components. After discussing the theoretical background for knowledge-based design (KBD) and the classification of design templates in the field of KBD, the usefulness of templates in design of structural components is argued. In order to set-up the design solution space as large as possible and not to automate a single design, we follow the assumption that assembly structure and model structure have to be considered independently. This is mirrored in a case study where beam elements are aggregated to different frame structures.**

***Index Terms*—knowledge-based design, knowledge-based templates, variant design automation, solution space development, structural components**

I. Introduction

Computer aided-Design (CAD) and Computer aided-Engineering (CAE) technologies have severe impact on variant design activities and allow the creation of digital parametric product models. These may be altered and adapted to a huge bandwidth of requirements.

However, using the traditional CAD modelling strategies, products habitually are considered and designed as predominantly rigid geometrical configurations. The need for a new product variant often leads to re-modelling and re-design which is a costly and time consuming routine task [1]. Knowledge-based Engineering (KBE) is an approach for product design that involves processes, methodologies and technologies for capture and reuse of product knowledge. The main idea of knowledge-based design (KBD) as subset of KBE is to widely automate design tasks by reusing predefined methods, results and algorithms [2]. So, KBD allows, in contrast to traditional modelling strategies, to set-up a design solution space [3].

Regarding structural components, a design solution space offers multiple potentials. On the one hand, the design of structural components often is embedded in concurrent engineering processes like in automotive engineering. Here, requirements constantly change according to the maturity and accuracy of the main product's virtual prototype. So, the ability to react on these changes in a predefined manner due to implemented design knowledge improves the efficiency of the design process.

On the other hand, flexible virtual models within such a solution space that may automatically be altered not only on level of their parameters but also to different topological configurations lead to a broader applicability of computer aided optimization. The exploration of the solution space is structured which improves the effectiveness of the design process.

The following article reflects our research in progress regarding the computer aided design of structural components. In section 2 the theoretical background for knowledge based engineering and template based design is presented. Afterwards, in section 3 we illustrate the template based design of structural components. Section 4 provides a general discussion of the approach while the closing section 5 contains conclusions and further research questions.

II. Theoretical Background

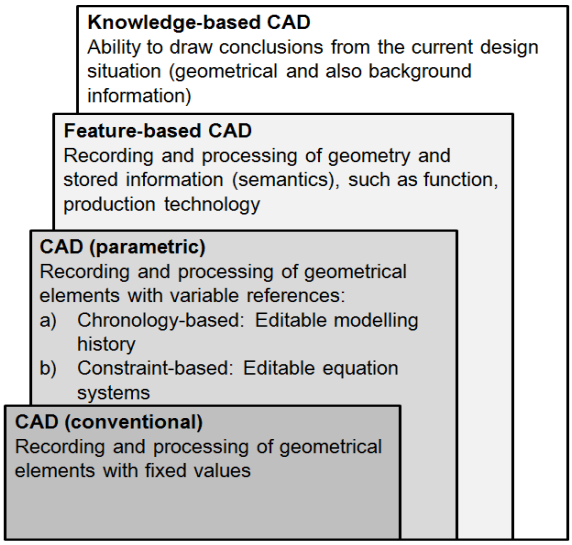

Figure 1. Overview of the principles of 3D modelling [5]

According to Chapman et al, 'KBE represents an evolutionary step in computer aided-engineering and is an engineering method that represents a merging of object-oriented programming, artificial intelligence and CAD technologies, giving benefit to customized or variant design automation solutions' [4].

Manuscript received June 3, 2017; revised August 1, 2017.

doi: 10.18178/ijmerr.6.5.336-342

As part of KBE, the main objective of KBD and its equivalent in product modelling, knowledge-based CAD, is the reduction of time and costs of product development by means of: (1) Automation of repetitive, non-creative, design tasks; (2) Support of multidisciplinary design optimization in all phases of the design process. Here, as shown in Fig. 1, the basis is the design system's ability to differentiate between shape and its describing parameters. In detail, parametrics is understood as use of variable values (parameters) for dimensions and variable constraints between objects and models in a CAx-system [5].

Basically four different parameter types have to be differentiated [5]:

- **Geometric parameters** define the shape of a part or assembly. To these belong all kinds of dimensions, sketch constraints like setting two lines parallel and positioning constraints.
- **Topology parameters** have to be understood as structural parameters which can control e.g. the suppression state of a component in an assembly or that of a feature in a part model.
- **Physical Parameters** determine the physical properties of the design like weight and moment of inertia.
- **Process** or **technological parameters** contain e.g. manufacturing restrictions like minimum bend radiuses or the angle of mold release slopes for cast designs.

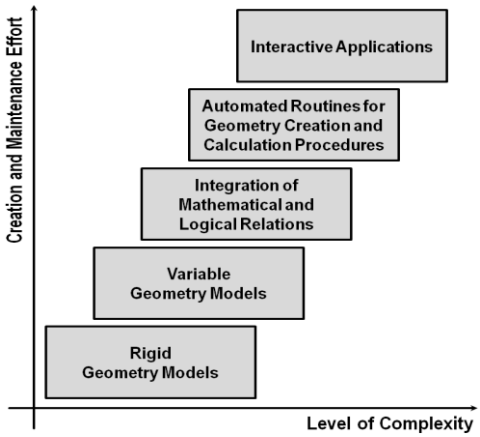

Figure 2. Different types of knowledge-based design applications [1]

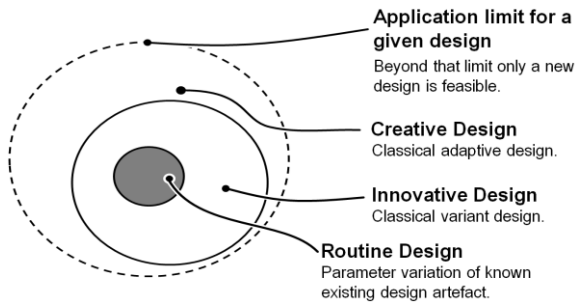

Figure 3. Design Prototypes (acc. to [11])

Different types of KBD-applications have been implemented in engineering design so far (Fig. 2). These range e.g. from expert systems for plant engineering and configuration over automation solutions for special design activities like fixture design or tooling to CAD-internal methods for implementation of dimensioning formulae into digital prototypes [6]-[10].

Regarding the design solution space that a KBD-application can cover, Gero presented the concept of design prototypes [11]. Following his argumentation, a design prototype represents a space where a design artefact, regardless whether product, subassembly or single part, may be altered in a certain way (Fig. 3).

The simplest way to do this is changing a product's parameters and then regenerate the design. This design activity is labeled *routine design*. In contrast to that, *innovative* and *creative designs* represent the traditional approaches to variant and adaptive design. The limit of *creative design* also marks the end of the variation possibilities of a given design. Beyond that border only a new design may satisfy the requirements.

Years before parametric CAD-systems became standard in the design departments, Gero had been postulating an acknowledged principle of computer aided design which is design templates.

A. Design Templates

From a KBD point of view, a design template belongs to automated routines for geometry creation. It may be understood as a parametric, updatable and reusable building block within a digital prototype. As such, geometry templates are further distinguished into rigid and variable geometry templates. The first represent carry-over-parts or library components that have additional process parameters available which cover knowledge about application, design interfaces or technical data in general. The latter is taken as predefined starting point for embodiment or detailed design that includes all necessary design rules and features. Beside geometry templates there also exist structural and functional ones. A structural template includes e.g. a basic generic product structure and different delimited physical design solution spaces. So, the design process is parallelized in a standardized way. A functional template represents the implementation of specific problem-solving methods and simulation tools, additionally to the geometry description. When embedded as computer aided engineering environment, a functional template can accelerate the design process since data transfer between design and calculation results is simplified [1]. Other common terms for templates are design blue prints, high level features or high level primitives [12].

According to Cox the creation of templates involves four steps [13]:

1. Use past experience, define the boundaries for the solution space
2. Map the product development process backwards into the context of the template
3. Develop a generic parametric model of all necessary products and artifacts
4. Map the specific model parameters into a common set of configuration parameters

Especially step 3 needs attention and weighing up effort and benefits. In literature, a commonly found generic model is the so called maximum bill of materials. Here, all ever occurring product variants are mapped into one product template which is then more an adequate configurator than a template.

B. Template Design of Structural Components

Regarding structural components, such an approach is in most cases not appropriate. Of course, the functionality of structural components does not change over time since it has to transmit or absorb mechanical energy in form of force or torque.

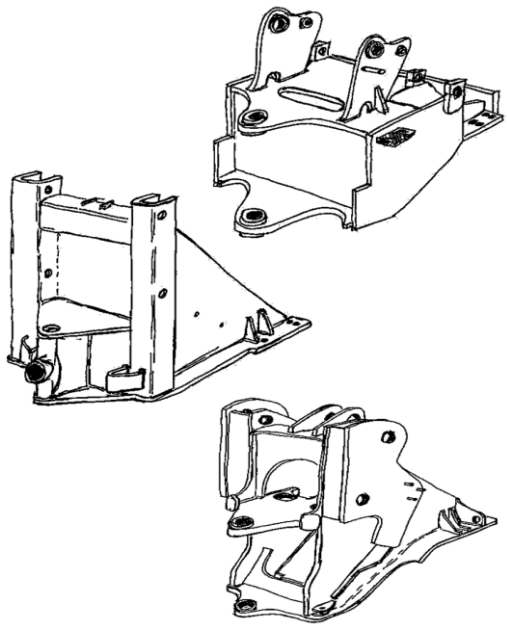

Figure 4. Different variants of wheel loader front frames

But due to the variance in requirements such as number of load application points, load cases, the possible physical design space and available manufacturing technologies and semi-finished products, the design solution space is way too large to be mapped into one single template. This is depicted in Fig. 4 which shows different variants of a wheel loader's front frame. Although the design task and the structure of functionality are completely similar, the shape of the designed parts differs.

Another important fact is the variance of load paths, e.g. identified by topology optimization. A template that could cover all possible configurations of beams and butt joints for a design task is hard to formulate. Especially if design knowledge like maximum deformation degree, effective length of weld or other manufacturing restrictions have to be implemented, the creation of robust CAD-models is difficult.

A possible solution to the above issues is shifting the focus from component to part level. Here, e.g. beams may be optimized regarding shape and sizing by existing technologies, the creation of robust concept models is possible, restrictions for the beam element itself may be implemented. Disadvantageous is the inability of addressing different kind of joining techniques between the single parts of the structural component within that approach.

From our point of view, this leads to the assumption that assembly structure and modelling structure have to be considered independently. The following section contains a case study where this has been applied for automotive beam structures.

III. Template-Based Modelling of Beam Structures

In automotive engineering, many structural components are assembled from beams and sheet metal parts. In the case study that is presented below, we focus on beam structures like found in car body design, chassis design or at rear swinging forks for motorcycles. For this case study, the CAD-system Autodesk Inventor was adapted and extended by macros. We focused on Inventor since it allows the use of multiple KBD-modelling techniques in its out-of-the-box configuration. For a detailed presentation and discussion refer to [8].

A. Origin

The approach originates from our works to the generative design approach [14].

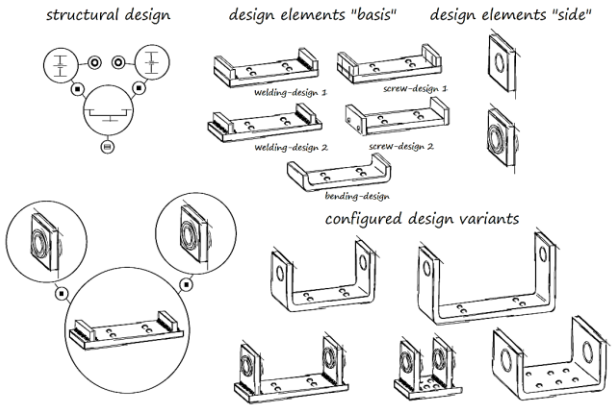

Figure 5. Different variants of wheel loader front frames

The basic idea behind is to divide a component into several design elements which are linked via a skeleton and addressed via multiple levels of parameters (Fig. 5). This separation into design elements and the structured parametrization allow the creation of CAD models that are robust against topological changes which is beneficial for computer aided optimization.

B. Overview

Following the above assumption, a template library for beam structure elements has to contain different geometrical configurations we refer to as design elements (Fig. 6).

First, the library must include beam elements for various cross sections like round tubes, rectangular tubes and e.g. forming parts. In order to cover a solution space also for e.g. hydroforming parts, transient beams from one cross section to another are added. Another class of beam elements is butt joints. Here, two or more beams are connected together, e.g. by welding or screwing. The

third class is connecting elements to surrounding parts like flanges. Those may also contain interfaces to one or more other beam elements.

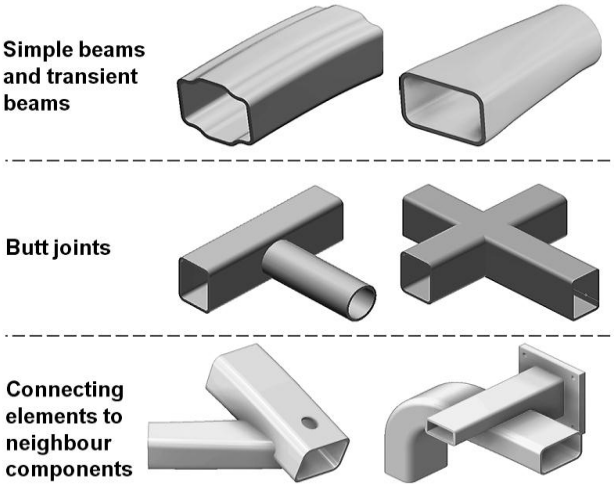

Figure 6. Design elements for beams

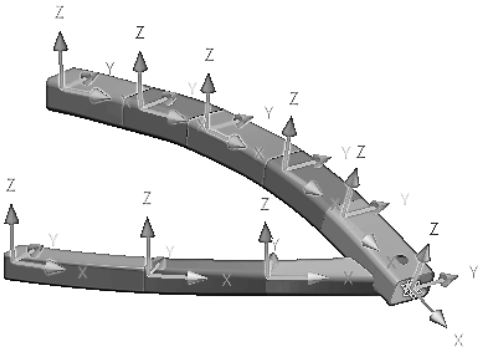

Figure 7. Beam element assembly

All these design elements may be assembled together via connecting points and interface sketches. On the one hand, the connection points function as positioning aids for placing one element after another. On the other hand, as local coordinate systems, they link the orientation of the intersecting faces to each other (Fig. 7). This is basically done by inheriting parameters of the connecting points to the design element. Therefore, Inventor offers functionalities like constraining parameters in equation systems or using the logic programming language iLogic. Prerequisite is the use of a naming convention for all parameters so that the constraining may be widely automated.

The interface sketches administer the shape of the cross-section. In order to do so, each of the design elements has an identifying parameter for all of its cross-sections. Two design elements may be joined when these parameters at a connection match to each other.

All connecting points have all six spatial degrees-of-freedom and can easily be adapted regarding position and orientation. In order to achieve a user friendly dialog, a macro based program has been implemented into Autodesk Inventor that reads all connection points of the beam assembly and then offers change dialogs for each of them (Fig. 8).

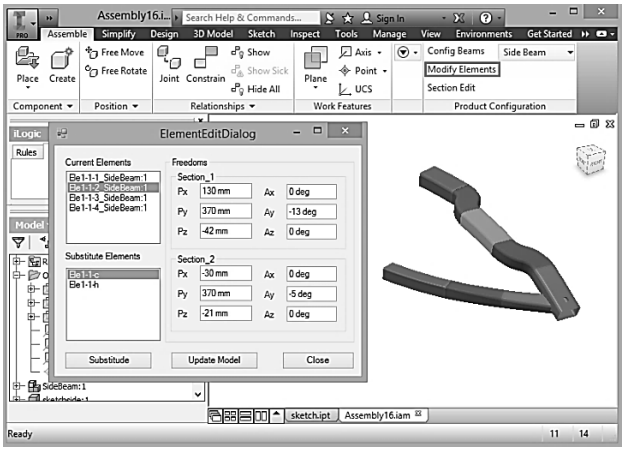

Figure 8. Connecting point modification

The same program allows changing the cross-section of the single beam elements. This addresses not only the shape but also the corresponding parameters (Fig. 9). In case of the rectangle tube this is width, height, fillet radius and wall thickness. If a cross-section is e.g. switched from rectangular to round tube, the corresponding design elements and parameters are substituted. The old parameters are stored for later retrieval.

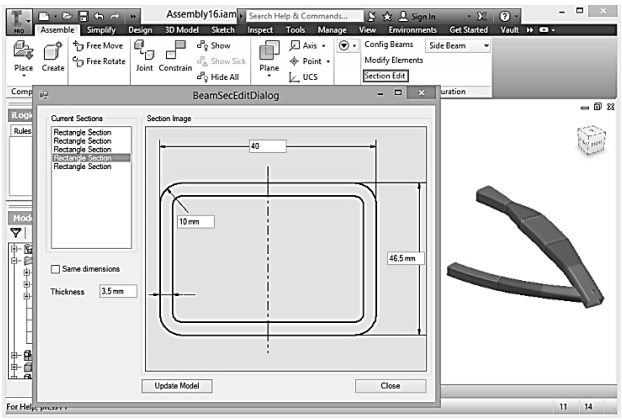

Figure 9. Cross-section modification

C. Parametrization Concept of a Beam Element

Step 3 of the Cox process involves the creation of a generic parametric model. With respect to the simple beam elements the design task calls for linking two cross-sections located in the three dimensional space regardless of their orientation.

Basis for this is the local coordinate system of the connecting points. The normal vectors of the cross-sections are used to establish auxiliary geometry either consisting of straight lines and arcs or of a Bezier spline. This is shown in Fig. 10 for a simplified two dimensional case. Note that the capabilities of the corresponding CAD systems and analysis tools might restrict this. In the example below, the setup via lines and arcs was chosen since it allows an analytical examination of the deformation degree.

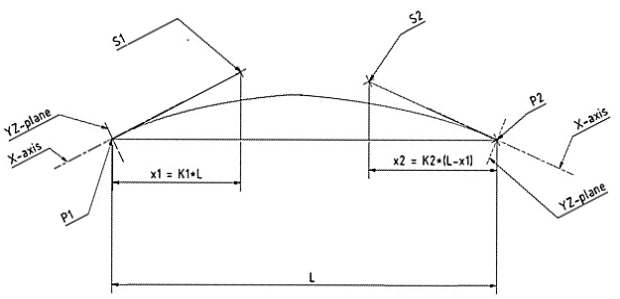

Figure 10. Linking two Cross-Sections with a Path

P1 and P2 are the local coordinate systems and the two x-axes are the cross-section normal vectors. S1 and S2 are auxiliary points that control the smoothness and radii of the created path. They are controlled by two additional parameters K1 and K2. Using equations (1) and (2) in accordance with the distance between P1 and P2, K1 and K2 are normalized between 0 and 1.

$$x1 = K1 \cdot L \qquad K1 \in [0\,,1] \qquad (1)$$

$$x2 = K2 \cdot (L - x1) \qquad K2 \in [0\,,1] \qquad (2)$$

For the three dimensional configuration of the path between P1 and P2 a further distinction of cases is necessary since a change of orientation of the cross-sections may result in a self-intersecting loop.

In addition to the weighing factors K1 and K2 the design element contains parameters for the geometric configuration of the cross-section itself and the already mentioned identifying parameters.

D. Integration of Manufacturing Restrictions

The design elements for the template library are not only modelled geometrically robust but they also incorporate knowledge about manufacturing restrictions. Such restrictions limit the design solution space and have been formulated for various applications. A common example is the minimum bend radius for sheet metals or mold release slopes [15].

If the restrictions are already present as explicit design rules or dimensioning formulae, they may directly be implemented into the design elements and their parametrics. Referring to the presented path of the beam element, the evaluation of the weighting parameters K1 and K2 allows calculation of the bend radius which is necessary information for deciding which bending process needs to be involved.

But also if the design knowledge is of tacit type, the templates offer a possibility to use that. I.e., the shape of a hydroforming part that has been a good design in a past design project may be coded as a design element. This also solves the problem that the application of manufacturing guidelines and design for excellence always should be considered case sensitive. A design element encloses such a case.

E. Potential for Computer Aided Optimization

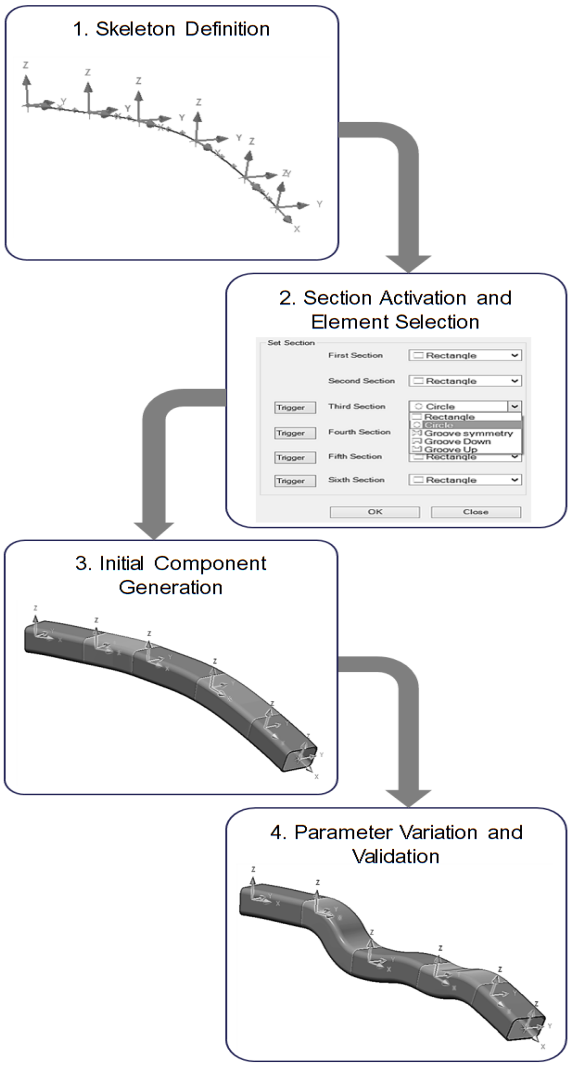

Figure 11. Shape optimization concept

The presented approach offers the possibilities of computer aided optimization. One possible strategy is to create an initial design using skeleton and a set of design elements like shown in Fig. 11. An optimization algorithm then starts altering different parameters on the skeleton level (position and orientation of the connecting points) in order to find the best shape based on given load cases. When the optimal path is identified, the optimization shifts to the parameter level of the single design elements and optimizes wall thicknesses, radii, etc.

F. Application Examples

Using the approach presented above, different structural components have been built. Fig. 12 shows on the top two chassis parts, a hydroforming part and a frame.

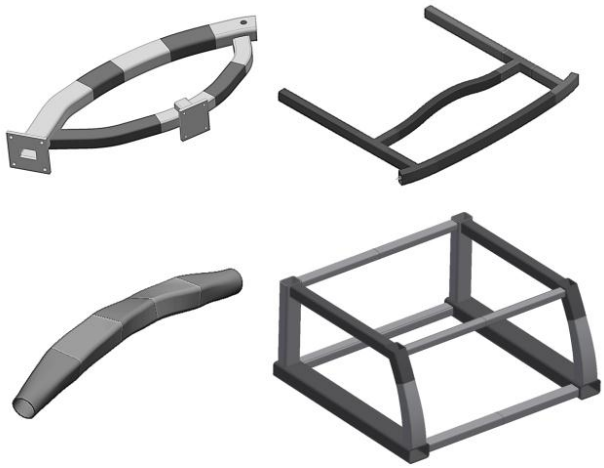

Figure 12. Different structural components generated from the Beam Templates

IV. Discussion

The presented concept covers a larger design solution space than conventional frame generators or design wizards implemented into present CAD-systems. The implementation of engineering knowledge allows including experience from production at an early stage in product development already.

Following template-based design results in a new form of collaborative design activities. On the one hand, the design element library needs constant upgrade and extension. This activity belongs to the design element specialist. He has to be trained in both design and in manufacturing engineering. He defines the shape and the necessary application limits of the element by the implementation of manufacturing restrictions.

The second design activity is the aggregation of new structural components out of the single design elements which is the task of the component architect. He has to be trained in mechanical design and, depending on the components to be designed, he should have a good overview about past developments and good skills in topology optimization. The architect also sets up the optimization process.

V. Conclusions

This paper reflects a template-based design approach for modelling the design solution space of structural components. The presented approach allows the creation of very different topological configurations which are flexible due to the implemented parametrics.

A possible next step in the development of the template-based modelling method is the implementation of an optimization strategy and according algorithms that alter the existing parameters. Here, strategies have to be formulated in what sequence the optimization should be performed. In general, it has to be considered that the amount of parameters which may be varied can be very high. So, finding the global optimum results in a time consuming task. A possible starting point like mentioned before is the variation of the connecting points' position and orientation. Afterwards the profile parameters are processed.

Another important point is the comparison to other modelling methods for structural components. This includes the use of concept modelers like SFE concept or Fast Concept Modeler. Although both systems allow a fast creation of models with accurate level of detail, the systems use a different form of geometric representation since they rely on implicit modelling [16]. A crucial point is the link to the later production geometry of the structural component and the integration of manufacturing restrictions which is only documented for exceptional cases. Nevertheless, the direct implementation of a FEA-system into the concept modelers allows the fast evaluation of a structural concept design. Here, the template-based design needs a separate analysis system where the design elements are meshed. Current research aims at implementing FE-parameters into the design elements as well.

References

[1] M. Hirz, W. Dietrich, A. Gfrerrer, and J. Lang, *Integrated Computer Aided Design in Automotive Development*; Berlin Heidelberg, Springer: 2013, ch. 5.

[2] W. Verhagen, P. Bermell-Garcia, R. van Dijk, and R. Curran, "A critical review of knowledge-based engineering: An identification of research challenges," *Advanced Engineering Informatics.*, vol. 26, no. 1, pp. 5-15, 2012.

[3] J. J. Shah, "Designing with parametric cad: Classification and comparison of construction techniques," *Geometric Modelling*, pp. 53-68, 2001.

[4] C. B. Chapman and M. Pinfold, "The application of a knowledge based engineering approach to the rapid design and analysis of an automotive structure," *Advances in Engineering Software*., vol. 32, no. 12, pp. 903-912, 2001.

[5] 3D Product Modelling, VDI Guideline 2209 -2009.

[6] L. Hvam, N. H. Mortensen, and J. Riis, *Product Customization*; Berlin Heidelberg, Springer-Verlag: 2008.

[7] I. Boyle, Y. Rong, and D. C. Brown, "A review and analysis of current computer aided fixture design approaches," *Robotics and Computer-Integrated Manufacturing*., vol. 27, no. 1, pp. 1-12, February 2011.

[8] P. C. Gembarski, H. B. Li, and R. Lachmayer, "KBE-Modeling techniques in standard CAD-systems: Case study – autodesk inventor professional," presented at the Proceedings of the 8th World Conference on Mass Customization, Personalization and Co-Creation (MCPC 2015), Montreal, Canada, June 20-22, 2015.

[9] R. Ravi, Y. V. R. K. Prasad, and V. V. S. Sarma, "Development of expert systems for the design of a hot-forging process based on material workability," *Materials Engineering and Performance*, vol. 12, pp 646-652, 2003.

[10] C. Xuewen, Z. Siyu, C. Jun, and R. Xueyu, "Research of knowledge-based hammer forging design support system," *The International Journal of Advanced Manufacturing Technology*, vol. 27, no. 1, pp. 25-32, 2005.

[11] J. S. Gero, "Design prototypes: A knowledge representation schema for design," in: *AI magazine*, vol. 11, no. 4, pp. 26-36, 1990.

[12] G. La Rocca and M. J. van Tooren, "Knowledge-based engineering to support aircraft multidisciplinary design and optimization, " *Journal of Aerospace Engineering*, vol. 224, no. 9, pp. 1041-1055, 2010.

[13] J. J. Cox, "Product templates-a parametric approach to mass customization," in *CAD Tools and Algorithms for Product Design*, P. Brunet, Ed. Berlin Heidelberg: Springer-Verlag, 2000, ch. 1, pp. 3-15.

[14] B. Sauthoff and R. Lachmayer, "Generative design approach for modeling of large design spaces," presented at the Proceedings of the 7th World Conference on Mass Customization, Personalization,

and Co-Creation (MCPC 2014), Aalborg, Denmark, February 04-07, 2014.

[15] P. C. Gembarski, B. Sauthoff, T. Brockmöller, and R. Lachmayer, "Operationalization of manufacturing restrictions for CAD- and KBE-systems," presented at the Proceedings of the DESIGN 2016 14th International Design Conference, Cavtat-Dubrovnik, Croatia, May 16-19, 2016.

[16] F. Duddeck and H. Zimmer, "New achievements on implicit parameterization techniques for combined shape and topology optimization for crashworthiness based on SFE CONCEPT," presented at *Shape and Topology Optimization for Crashworthiness*, Milano, Italy, July 18-20, 2012.