International Journal of Mechanical Engineering and Robotics Research

ISSN 2278 – 0149 www.ijmerr.com
Vol. 2, No. 1, January 2013

Research Paper

KINEMATICS OF MINI HYDRAULIC BACKHOE EXCAVATOR – PART: I

Bhaveshkumar P Patel[1]* and J M Prajapati[2]

*Corresponding Author: ***Bhaveshkumar P Patel,*** ✉ bppmech@gmail.com

Backhoe excavators are construction machines can be use for hazardous and even poisonous environmental conditions, worst working conditions, severe weather, and dirty areas where it is very difficult to operate machine by human operator. The excavation task can be performing successfully and effectively for above mentioned working conditions by semiautonomous or fully computer controlled of excavation machines. For this it is important to understand the kinematics of this machine. For autonomous excavation operation of a backhoe, it is desirable to place the bucket to a specified location. The bucket configuration can be determined by the direct kinematic equations for given lengths of the piston rods in the actuators or the joint angles. This paper emphasize on the explicit expressions for the direct (forward) kinematics of backhoe excavator. It covers systematic procedure to assign Cartesian coordinate frames for the links (joints) of an excavator. The developed forward kinematic model is intended for development of an automated excavation control system for light duty construction work and can be applied for heavy duty or all types of backhoe excavators.

Keywords: Autonomous, Excavation, Bucket configuration, Direct kinematic, Backhoe excavator

INTRODUCTION

Rapidly growing rate of industry of earth moving machines is assured through the high performance construction machineries with complex mechanism and automation of construction activity. Backhoe excavators are widely used for most arduous earth moving work in engineering construction to excavate below the natural surface of the ground on which the machine rests. Hydraulic system is used for operation of the machine while digging or moving the material. An excavator is comprised of three planar implements connected through revolute joints known as the

[1] Mechanical Engineering Department, JJT University, Jhunjhunu 333001, Rajasthan, India.

[2] Mechanical Engineering Department, Faculty of Engineering & Technology, M S University of Baroda, Vadodara 390002, Gujarat, India.

boom, arm, and bucket, and one vertical revolute joint known as the swing joint (Howard, 1999).

Autonomous excavation is the best solution to carry out excavation task in hazardous and poisonous environment conditions, worst working conditions, severe weather, and dirty areas where it is very difficult to operate machine by human operator. Some times at construction site, the excavation machines are not utilized in effective way as their capacities if they are operated manually or semiskilled operator. The semiautonomous or automatic computer control is essential to improve the productivity and the effective use of expensive construction machines. Moreover, automatically operated machines can often perform a task faster and with better precision than manually operated machines (Koivo, 1994). To automate the excavation task, it is necessary to understand the kinematics of this machine. Kinematics of backhoe link mechanism is one of the steps in the direction to automate the excavation operation. The presented basics of kinematics and kinematic model can be applied to other loader and hydraulic backhoe excavators which are used to excavate the surface materials of terrain. Kinematics is the science of motion which treats motion without regard to the forces that cause it. Within the science of kinematics one studies the position, velocity, acceleration, and all higher order derivatives of the position variables (with respect to time or any other variables) (John, 1989).

A backhoe excavator is designed to perform a task in the 3-D space. The bucket of the backhoe is required to follow a planned trajectory to carry out the digging task in the workspace. This requires control of position of each link (swing link, boom, arm, and the bucket) and joints of the backhoe to control both the position and orientation of the bucket. To program the bucket motion and the joint link motions, a mathematical model of the backhoe is required to refer all geometrical and/or time based properties of the motion. In other words kinematic model purely encodes the geometric relationship of the mechanism under study. Moreover; the kinematic model gives relation between the position and orientation of the bucket and spatial positions of joint-links. A problem of describing the direct kinematic model for an autonomous operation of the backhoe excavator is presented here.

RELATED WORK

Vaha and Skibniewski (1993) firstly developed kinematics of the excavator by appropriate frame assignments. Vaha developed this kinematic model only as a prerequisite for the dynamic model. He developed the kinematic model for a hydraulic excavator in the general form only, thus giving up to the general transformation matrix relating two consecutive frames (relating frame $\{i-1\}$ to the frame $\{i\}$). His kinematic model was not thorough, and thus not giving a clear insight in terms of the forward kinematics, inverse kinematics, and velocity equations.

Koivo (1994) on the other hand developed a complete kinematic model for a hydraulic excavator, considering the three degrees of freedom excavator mechanism or RRR configuration. He actually developed a kinematic model for three degrees of freedom excavator by neglecting the swing motion (in excavator swing motion is applied by electric

motor or actuator not by hydraulic actuator). He also incorporated the shortcomings of Vaha's kinematic model as he proposed the forward kinematic model incorporating equations relating joint shaft angles to the bucket pose (or bucket configuration), and equations relating lengths of hydraulic actuators to joint shaft angles. Thus firstly determining the bucket position and orientation in terms of joint shaft angles, and then giving the relationship between the joint shaft angles and the lengths of the piston rods in hydraulic actuators for boom, arm, and bucket cylinders. He also proposed a complete inverse kinematic model by giving firstly the joint shaft angles in terms of bucket pose, and then joint shaft angles in terms of the lengths of the hydraulic actuators. He also proposed a direct excavator Jacobian matrix to calculate the bucket velocity provided that the joint shaft velocities are known and also proposed velocity equations of actuator pistons in terms of the speeds of the joint shafts. But his model can said to be incomplete in some context as: he did not carry out the velocities of each link (swing link, boom, arm, and bucket), he did not present the full Jacobian matrix of the size 6×4 and instead presented of the size 4×4 by neglecting the last two rows of the matrix, as it was the fact that only one angular velocity of the bucket can be controlled and that is in the Z direction or in the direction of the bucket joint axis. He also did not carry out the inverse Jacobian on the excavator mechanism which is necessary when the desired bucket velocity is to be achieved by controlling the joint velocities. Zygmunt (2003) developed few kinematic relationships in terms of the transformation matrices between the frames. He only determined those kinematic equations that can be helpful for him to develop a mathematical dynamic model for an excavator. Apart from this, the transformation matrices established by him were only giving the rotational transformation, as it was the only need for his study. Thus he also did not establish any systematic kinematic relationships required encoding the geometrical relationships of the excavator, and his kinematic model remained incomplete. Shaban *et al.* (2007) developed a kinematic model for the excavator, but for the arm, and boom only, thus representing the kinematic model in two degrees of freedom only. He also established the inverse kinematic model for the two degrees of freedom only. But the shortcomings of his model are: he did not determine any systematic procedure to assign the frames to the links, both the forward and inverse kinematic models presented by him were incomplete in terms of the relationship between the bucket position and orientation (collectively known as bucket configuration), and joint angles, and the relationship between the actuator lengths and joint angles of the excavator. So to be concluded, from these four kinematic models, the kinematic model of Koivo (1994) gives a complete kinematic relationship for the geometry of a hydraulic excavator assuming in three degrees of freedom. But a complete kinematic relationship for the geometry of the backhoe for four degrees of freedom has not been presented so far, and this is one of the areas of research reported in this paper.

AFFIXING FRAMES TO THE LINKS

Fundamentally a backhoe excavator has five links starting from the fixed link or base link,

swing link, boom link, arm link (dipper link), and bucket link. These links are connected to each other by joints, which allow revolute motion between connected links each of which exhibits just one degree of freedom. This leads to the four degree of freedom R-RRR configuration of the backhoe, where R stands for a revolute joint.

Figure 1 describes the schematic side view of the backhoe excavator. To develop kinematic relations for the geometry of the backhoe; firstly the coordinate frames will be assigned to the backhoe excavator links.

To analyse the motion of the backhoe excavator in Figure 1 for performing a specific task, it becomes necessary to define a world coordinate system to describe the position and orientation of the bucket (collectively known as configuration of the bucket). A right-hand Cartesian coordinate system $X_w Y_w Z_w$ is chosen, and its origin is placed at an arbitrary point on the ground level in the workspace of the backhoe excavator. After assigning the world coordinate frame the local coordinate frames for all links are assigned by following the DH guideline for link frame assignment algorithm given in (Mittal and Nagrath, 2003). Figure 1 shows the schematic view of a backhoe excavator and frame assignments.

After assignment to the all coordinate frames is done, any point P in the ith coordinate frame can be written as ${}^{i}\boldsymbol{P}$. Where, point ${}^{i}\boldsymbol{P}$ refer to the point P with respect to frame $\{i\}$. The ${}^{i}\boldsymbol{P} = [{}^{i}p_x \; {}^{i}p_y \; {}^{i}p_z \; 1]^T$, where the fourth component 1 is the scale factor. The scale factor has been taken 1 to make the components of Cartesian representation and homogeneous representation identical. Where, ${}^{i}p_x$, ${}^{i}p_y$, and ${}^{i}p_z$ indicate the x, y, and z coordinates of point P with respect to the ith coordinate frame, respectively.

Figure 1: Schematic View of a Backhoe Excavator and Frame Assignments

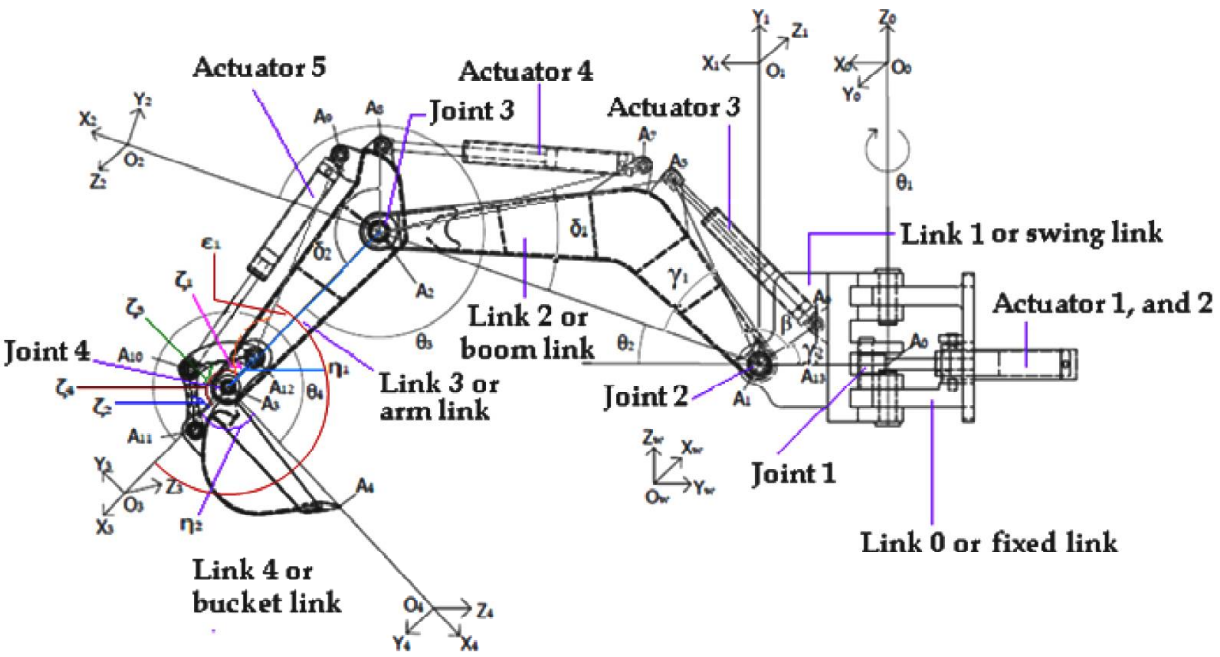

DIRECT KINEMATICS OF BACKHOE EXCAVATOR

For the controlling and the automatic operation of a backhoe, it is desirable to place the bucket to a specified location. This can be achieved by selecting the proper lengths of the piston rods in the cylinder, and thus selecting the joint angles properly. The kinematic equations are the mathematical equations those relate the position and orientation of the bucket (bucket configuration) to the joint variables (joint angles in our case) or to the lengths of the piston rods in the hydraulic actuators. If the lengths of the piston rods in the actuators or the joint angles are given, the bucket configuration can be determined by the direct or forward kinematic equations. Whereas; if the bucket configuration is specified, then the corresponding joint angles or the lengths of the piston rods in actuators can be calculated from the inverse kinematic equations, but it is covered in the part-II of this paper (Bhaveshkumar and Prajapati, 2012). Here, firstly the direct kinematic equations are presented.

To establish the homogeneous transformation matrix ${}^{i-1}\boldsymbol{T}_i$, which describes the position and orientation of frame {*i*} relative to frame {*i* – 1}, and completely specifies geometric relationship between these links in terms of four D-H parameters (θ_i, d_i, α_i, a_i). ${}^{i-1}\boldsymbol{T}_i$ can be given as follow:

$$ {}^{i-1}\boldsymbol{T}_i = \begin{bmatrix} C\theta_i & -S\theta_i C\alpha_i & S\theta_i S\alpha_i & a_i C\theta_i \\ S\theta_i & C\theta_i C\alpha_i & -C\theta_i S\alpha_i & a_i S\theta_i \\ 0 & S\alpha_i & C\alpha_i & d_i \\ 0 & 0 & 0 & 1 \end{bmatrix} \quad ...(1) $$

where, $C\theta_i = \cos(\theta_i)$, $S\theta_i = \sin(\theta_i)$, $C\alpha_i = \cos(\alpha_i)$, and $S\alpha_i = \sin(\alpha_i)$.

Here a_i, and α_i are two link parameters, and d_i, and θ_i are two joint parameters. Out of these four parameters, only one is a variable for link *i*, the joint displacement variable q_i (θ_i) and other three are constant. These all parameters are defined in the Denavit-Hartenberg guidelines and notation given in (Mittal and Nagrath, 2003).

Transformation Matrix of Bucket Frame

The bucket configuration relative to the base frame can be found by considering the 4 consecutive link transformation matrices relating frames fixed to adjacent links. Thus,

$$ {}^{0}\boldsymbol{T}_4 = {}^{0}\boldsymbol{T}_1(\theta_1)\,{}^{1}\boldsymbol{T}_2(\theta_2)\,{}^{2}\boldsymbol{T}_3(\theta_3)\,{}^{3}\boldsymbol{T}_4(\theta_4) \quad ....(2) $$

So to determine the homogeneous transformation matrix that relates the link 0 to link 4 (${}^{0}\boldsymbol{T}_4$), firstly other four transformation matrices as given in Equation (2) must be determined. To determine ${}^{i-1}\boldsymbol{T}_i$ we need to determine the three parameters, θ_i, α_i, and a_i (as given in Table 1). The values of a_i, α_i, and θ_i are found out for our case based on guide line given in (Mittal and Nagrath, 2003). As for an example link twist α_1 determines the angle between Z_0– and Z_1– axes measured about the X_1– axis in the right hand side = +90. Similarly, the values of other link twist angles are determined. The joint distance di for *i* = 1, 2, 3, 4 is zero, because all joints are revolute joints. The link lengths a_1, a_2, a_3, a_4 are the lengths of swing link, boom, arm, and bucket respectively, and taken as it is to keep the calculation procedure more simplified, and later on the values of a_i for *i* = 1, 2, 3, 4 can be substituted from the dimensions of the backhoe.

Table 1: Joint-Link Kinematic Parameters for the Backhoe

Link i	a_i	α_i	d_i	θ_i	q_i
1	a_1	90	0	θ_1	θ_1
2	a_2	0	0	θ_2	θ_2
3	a_3	0	0	θ_3	θ_3
4	a_4	0	0	θ_4	θ_4

The substitution of the parameter values of Table 1 into Equation (1) gives the following homogeneous transformation matrices:

$$ {}^0\boldsymbol{T}_1 = \begin{vmatrix} C_1 & 0 & S_1 & a_1C_1 \\ S_1 & 0 & -C_1 & a_1S_1 \\ 0 & 1 & 0 & 0 \\ 0 & 0 & 0 & 1 \end{vmatrix} \quad ...(3) $$

$$ {}^1\boldsymbol{T}_2 = \begin{vmatrix} C_2 & -S_2 & 0 & a_2C_2 \\ S_2 & C_2 & 0 & a_2S_2 \\ 0 & 0 & 1 & 0 \\ 0 & 0 & 0 & 1 \end{vmatrix} \quad ...(4) $$

$$ {}^2\boldsymbol{T}_3 = \begin{vmatrix} C_3 & -S_3 & 0 & a_3C_3 \\ S_3 & C_3 & 0 & a_3S_3 \\ 0 & 0 & 1 & 0 \\ 0 & 0 & 0 & 1 \end{vmatrix} \quad ...(5) $$

$$ {}^3\boldsymbol{T}_4 = \begin{vmatrix} C_4 & -S_4 & 0 & a_4C_4 \\ S_4 & C_4 & 0 & a_4S_4 \\ 0 & 0 & 1 & 0 \\ 0 & 0 & 0 & 1 \end{vmatrix} \quad ...(6) $$

Now the location of the bucket from the Figure 1 can be specified by locating the rotational axis of the bucket motion, i.e., to determine the coordinates of point $O_3 = A_3$. The coordinates of the point O_3 with respect to base frame 0, i.e., ${}^0\boldsymbol{P}_{A3}$ can be given as:

$$ {}^0\boldsymbol{P}_{A3} = {}^0\boldsymbol{T}_3\,{}^3\boldsymbol{P}_{A3} \quad ...(7) $$

But, ${}^0\boldsymbol{T}_3 = {}^0\boldsymbol{T}_1\,{}^1\boldsymbol{T}_2\,{}^2\boldsymbol{T}_3$, therefore, ${}^0\boldsymbol{P}_{A3} = {}^0\boldsymbol{T}_1\,{}^1\boldsymbol{T}_2\,{}^2\boldsymbol{T}_3\,{}^3\boldsymbol{P}_{A3}$.

where, ${}^3\boldsymbol{P}_{A3}$ indicates the coordinates of the point A_3 with respect to the coordinate frame {3}. So ${}^3\boldsymbol{P}_{A3} = [0\ 0\ 0\ 1]^T$. With the help of the Equations (3), (4) and (5) ${}^0\boldsymbol{T}_3$ can be written as follow:

$$ {}^0\boldsymbol{T}_3 = \begin{bmatrix} C_1C_{23} & -C_1S_{23} & S_1 & C_1(a_1 + a_2C_2 + a_3C_{23}) \\ S_1C_{23} & -S_1S_{23} & -C_1 & S_1(a_1 + a_2C_2 + a_3C_{23}) \\ S_{23} & C_{23} & 0 & a_2S_2 + a_3S_{23} \\ 0 & 0 & 0 & 1 \end{bmatrix} \quad ...(8) $$

where, $C_{23} = \cos(\theta_2 + \theta_3)$, and $S_{23} = \sin(\theta_2 + \theta_3)$. By neglecting the fourth raw and the fourth column of the Equation (8) one yields 3×3 rotational matrix ${}^0\boldsymbol{R}_3$, which shows the rotation of the frame {3} with respect to base frame {0}. By putting the values of ${}^0\boldsymbol{T}_3$ from equation (8), and ${}^3\boldsymbol{P}_{A3} = [0\ 0\ 0\ 1]^T$ into Equation (7), one yields;

$$ {}^0\boldsymbol{P}_{A3} = [C_1(a_1 + a_2C_2 + a_3C_{23})\ S_1(a_1 + a_2C_2 + a_3C_{23})\ a_2S_2 + a_3S_{23}1]^T \quad ....(9) $$

Here superscript T refers to the transposition of the raw matrix, i.e., a position vector. If the values of the joint variables, θ_1, θ_2, θ_3 are known then the location of the point $O_3 = A_3$ in the base coordinate system can be determined by Equation (9). Similarly the coordinates of point A_4 with respect to the base frame {0} can be found out as ${}^0\boldsymbol{P}_{A4} = {}^0\boldsymbol{T}_4\,{}^4\boldsymbol{P}_{A4}$, where ${}^4\boldsymbol{P}_{A4} = [0\ 0\ 0\ 1]^T$. The transformation matrix ${}^0\boldsymbol{T}_4$ can be found by multiplying ${}^0\boldsymbol{T}_3$ with ${}^3\boldsymbol{T}_4$ and can be given as follows:

$$ {}^0\boldsymbol{T}_4 = \begin{bmatrix} C_1C_{234} & -C_1S_{234} & S_1 & C_1(a_1 + a_2C_2 + a_3C_{23} + a_4C_{234}) \\ S_1C_{234} & -S_1S_{234} & -C_1 & S_1(a_1 + a_2C_2 + a_3C_{23} + a_4C_{234}) \\ S_{234} & C_{234} & 0 & a_2S_2 + a_3S_{23} + a_4S_{234} \\ 0 & 0 & 0 & 1 \end{bmatrix} \quad ...(10) $$

where, $C_{234} = \cos(\theta_2 + \theta_3 + \theta_4)$, and $S_{234} = \sin(\theta_2 + \theta_3 + \theta_4)$. This will give the coordinates of the point A_4 as:

$$^4\boldsymbol{P}_{A4} = [C_1(a_1 + a_2C_2 + a_3C_{23} + a_4C_{234})\ S_1(a_1 + a_2C_2 + a_3C_{23} + a_4C_{234})\ a_2S_2 + a_3S_{23} + a_4S_{234}\ 1]^T$$

This means that if the joint variable values θ_1, θ_2, θ_3, θ_4 are known, the position and orientation of the point A_4 or O_4 can be known with respect to the base frame {0}.

Relation Between Length of the Piston Rods in Actuators and Joint Angles

The backhoe excavator is a construction machine that uses hydraulic actuators to carry out the digging operation. In the hydraulic cylinder, the pressure on the piston is controlled. So ultimately the lengths of the piston rods determine the joint angles of the respective links. This means that there is a direct relation between the piston rod length and the joint angles, and the lengths of the piston rods are determined here by the line segment joining two actuator's attachment points, e.g., from Figure 1 it can be seen that the length of the actuator 3 is A_5A_6.

Firstly the relation between actuator 1, actuator 2 and joint angle θ_1 will be determined. Figure 2 shows the top view of the assembly of base (fixed) link and the swing link of the backhoe.

From the Figure 2 it can be seen that points *S* and *U* are the centre of the holes where cylinders actuator 1 and actuator 2 (swing cylinders) link are attached to the fixed link respectively. Points *T* and *V* are the points where piston rods of actuator 1 and actuator 2 are attached to the swing link respectively. This means the distances *SU*, and *TV* will always

Figure 2: Geometry of Top View of the Base to Swing Link

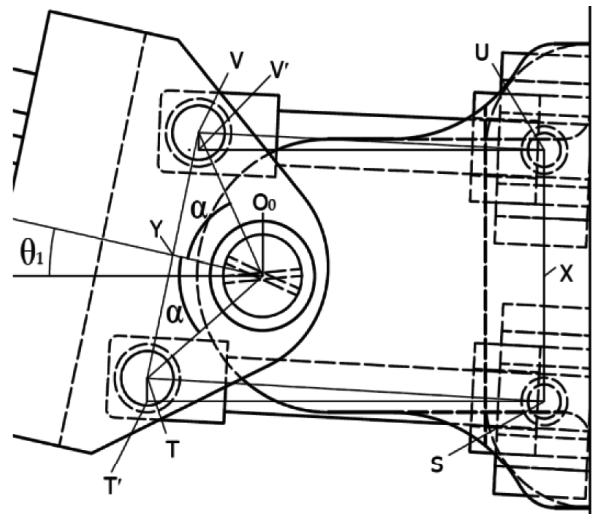

remain constant. Apart from this if the point *X* is taken as the middle point of the line segment *SU*, then from the geometry point X aligns with the origin of frame {0} (i.e., O_0) horizontally.

This gives the distances *XS*, *XU*, and XO_0 to be constant. Similarly if the midpoint of the line segment *TV* is *Y* then the angle between lines YO_0, O_0T and between the lines YO_0, O_0V is same and it is $\angle YO_0V = \angle YO_0T = \alpha$, and it is also constant once the geometry is designed, as shown in Figure 2 (Because, *TY* = *YV*). Also the distances O_0T, and O_0V are constant, similarly O_0S, O_0T, O_0U, O_0V are also constant from the geometry. Apart from this line O_0Y always coincides with the line O_0O_1 (i.e., X_1 axis). The θ_1 is the angle between axis X_0 and X_1 measured from the axis X_0 in the clock wise direction. This gives the angle between lines YO_0 and the axis X_0 to be θ_1 as shown in Figure 2. This means that to find the length of the actuators 1, and 2 one may find the ST, and UV and then the remaining distance of the hydraulic cylinders should be added to the values of *ST*, and *UV* respectively (see

Figure 2). In our case we will call only ST to be the length of actuator 1, and UV to be the length of the actuator 2. From the geometry as shown in the Figure 2

$$(ST)^2 = (ST')^2 + (TT')^2 \quad \ldots(11)$$

$$(ST)^2 = [O_0X + O_0T\cos(\alpha - \theta_1)^2] + [XS - O_0T\sin(\alpha - \theta_1)]^2 \quad \ldots(12)$$

Equation (12) gives the length of the piston rod of the hydraulic actuator 1 in terms of joint angle θ_1. This means that if the joint angle θ_1 is known then the length of the piston rod of actuator 1, ST can be found out from Equation (12). On the other hand, if the length of the piston rod of actuator 1, ST is known then the joint 1 angle θ_1 can be determined as follows:

$$\theta_1 = \alpha - \pi - \tan^{-1}\left(\frac{XS}{O_0x}\right) + \tan^{-1}\left[\frac{\left\{4(O_0S)^2(O_0T)^2 - \left[(O_0S)^2 + (O_0T)^2 - (ST)^2\right]^2\right\}^{\frac{1}{2}}}{\left[(O_0S)^2 + (O_0T)^2 - (ST)^2\right]}\right] \quad \ldots(13)$$

In Equation (13) gives the value of the joint 1 angle θ_1 if the length of the piston rod of actuator 1 = ST is known. Also from the geometry as shown in the Figure 2,

$$(UV)^2 = (UV')^2 + (VV')^2 \quad \ldots(14)$$

$$(UV)^2 = [O_0V\cos(\alpha + \theta_1) + O_0X]^2 + [O_0V\sin(\alpha + \theta_1) - XU]^2 \quad \ldots(15)$$

Equation (15) gives the length of the piston rod of hydraulic actuator 2 in terms of joint angle θ_1. This means that if the joint angle θ_1 is known then the length of the piston rod of actuator 2, UV can be found out from Equation (15). On the other hand, if the length of the piston rod of actuator 2, UV is known then the joint 1 angle θ_1 can be determined as follows:

$$\theta_1 = \pi - \alpha - \tan^{-1}\left(\frac{XU}{O_0x}\right) + \tan^{-1}\left[\frac{\left\{4(O_0U)^2(O_0V)^2 - \left[(O_0U)^2 + (O_0V)^2 - (UV)^2\right]^2\right\}^{\frac{1}{2}}}{\left[(O_0U)^2 + (O_0V)^2 - (UV)^2\right]}\right] \quad \ldots(16)$$

In Equation (16) gives the value of the joint 1 angle θ_1 if the length of the piston rod of actuator 2 = UV is known. The length of the piston rod of actuator 3 = A_5A_6 can be found out from the Figure 1, which moves the joint 2 of angle θ_2. The length of the piston rod of actuator 3 = A_5A_6 can be express as follows, if the joint angle θ_2 is known.

$$(A_5A_6)^2 = (A_1A_5)^2 + (A_1A_6)^2 - 2(A_1A_5)(A_1A_6)\cos(\pi - \gamma_1 - \theta_2 - \gamma_2) \quad \ldots(17)$$

where, A_1A_5, and A_1A_6 have specific constant values, also $\angle A_5A_1A_2 = Y_1$ and the angle between the line A_1A_6 and the axis $X_0 = Y_2$ are constant, thus known to us. The Equation (17) can be used to determine the joint angle θ_2. If the length of the piston rod of actuator 3 = A_5A_6 is known, then the trigonometric equation of (17) can be solved for joint 2 angle θ_2 by using the standard method, and it can be express as follows.

$$\theta_2 = \pi - \gamma_1 - \gamma_2 - \tan^{-1}\left[\frac{\left\{4(A_1A_5)^2(A_1A_6)^2 - \left[(A_1A_5)^2 + (A_1A_6)^2 - (A_5A_6)^2\right]^2\right\}^{\frac{1}{2}}}{\left[(A_1A_5)^2 + (A_1A_6)^2 - (A_5A_6)^2\right]}\right] \quad \ldots(18)$$

Thus the Equation (18) gives the value of joint 2 angle θ_2 if the length of the piston rod of actuator 3 = A_5A_6 is known. Actuator 4 connects the boom link to the arm link, known as arm cylinder, and it controls the motion of the arm, at joint 3. The length of the piston rod of actuator 4 = A_7A_8 moves the joint 3 angle θ_3. From the Figure 1 it can be seen that the $\angle A_1A_2A_7 = \delta_1$, and $\angle A_8A_2A_3 = \delta_2$ are constant for the geometry of boom and arm respectively, and thus are known to us, also it follows that $\angle A_8A_2A_7 = 2\pi - \delta_1 - \delta_2 - (\theta_3 - \pi) = 3\pi - \delta_1 - \delta_2 - \theta_3$. Then for the $\Delta A_8A_2A_7$, if the cosine rule for $\Delta A_8A_2A_7$ is applied, one yields;

$$(A_7A_8)^2 = (A_2A_7)^2 + (A_2A_8)^2 - 2(A_2A_7)(A_2A_8)\cos(3\pi - \delta_1 - \delta_2 - \theta_3) \quad \ldots(19)$$

Equation (19) gives the length of the piston rod of actuator 4, if the joint 3 angle θ_3 is known. The reverse is also possible that if the length of the piston rod of actuator 4 = A_7A_8 is known, then the joint 3 angle θ_3 can be found out by solving the Equation (19) in terms of tan function instead of sine or cosine functions for θ_3, as follows:

$$\theta_3 = 3\pi - \delta_1 - \delta_2 - \tan^{-1}\left[\frac{\left\{4(A_2A_7)^2(A_2A_8)^2 - \left[(A_2A_7)^2 + (A_2A_8)^2 - (A_7A_8)^2\right]^2\right\}^{\frac{1}{2}}}{\left[(A_2A_7)^2 + (A_2A_8)^2 - (A_7A_8)^2\right]}\right] \quad \ldots(20)$$

Now let's move on to find the length of the piston rod of actuator 5 (bucket actuator) = A_9A_{10} (Figure 1) in terms of the joint 4 angle θ_4, and later on find the angle θ_4 in terms of the piston rod length of actuator 5 = A_9A_{10}. It can be seen from the Figure 1 that actuator 5 causes the bucket to rotate about the joint 4 axis that is Z_4. The task to find the length of the actuator 5 is tricky, because unlike other actuators, one end of the actuator 5 (point A_{10}) is not directly attached to the bucket, and this makes the geometry more complicated. The length of the piston rod of actuator 5 = A_9A_{10} is determined by the following Equation (21), if the value of ζ_1 is known,

$$(A_9A_{10})^2 = (A_9A_{12})^2 + (A_{10}A_{12})^2 - 2(A_9A_{12})(A_{10}A_{12})\cos(2\pi - \varepsilon_1 - \zeta_1) \quad \ldots(21)$$

where, the lengths A_9A_{12}, and $A_{10}A_{12}$ are constant, also ε_1 = the major $\angle A_9A_{12}A_3$ is constant and known to us. ζ_1 = the $\angle A_3A_{12}A_{10}$ as shown in Figure 1, but the ζ_1 is not constant. Here, we want to determine the length of the piston rod of actuator 5 = A_9A_{10} in terms of the joint angle θ_4. Firstly, let us find ζ_1 in terms of the length of the piston rod of actuator 5 = A_9A_{10}, and that is given by,

$$\zeta_1 = 2\pi - \varepsilon_1 - \tan^{-1}\left[\frac{\left\{4(A_9A_{12})^2(A_{10}A_{12})^2 - \left[(A_9A_{12})^2 + (A_{10}A_{12})^2 - (A_9A_0)^2\right]^2\right\}^{\frac{1}{2}}}{\left[(A_9A_{12})^2 + (A_{10}A_{12})^2 - (A_9A_{10})^2\right]}\right] \quad \ldots(22)$$

Now, let us find ζ_1 in terms of θ_4. From the Figure 1 it can be seen that,

$$2\pi = \angle A_4A_3A_{11} + \angle A_{11}A_3A_9 + \angle A_9A_3A_{12} + \angle A_{12}A_3A_2 + \angle A_2A_3A_4 \quad \ldots(23)$$

Now, let's concentrate on the quadrilateral $A_{10}A_{12}A_3A_{11}$. We already found the value of the $\angle A_{10}A_{12}A_3 = \zeta_1$ in Equation (23). Let's assume the $\angle A_{10}A_{11}A_3 = \zeta_2$, the $\angle A_{12}A_{10}A_{11} = \zeta_3$, the $\angle A_{12}A_3A_{11} = \zeta_4$ and $\angle A_2A_3A_4 = (\theta_4 - \pi)$. From the Figure 1 it can be seen that,

$$\zeta_4 = 2\pi - \angle A_{12}A_3A_2 - (\theta_4 - \pi) - \angle A_4A_3A_{11} \quad \ldots(24)$$

Here, the $\angle A_{12}A_3A_2 = \eta_1$ and $\angle A_4A_3A_{11} = \eta_2$ are constant, and thus known for us. This leads to,

$$\zeta_4 = 3\pi - \eta_1 - \eta_2 - \theta_4 \quad \ldots(25)$$

Also for the quadrilateral $A_{10}A_{12}A_3A_{11}$,

$$\zeta_1 + \zeta_2 + \zeta_3 + \zeta_4 = 2\pi \quad \ldots(26)$$

This gives,

$$\zeta_1 + \zeta_2 = -\pi + \eta_1 + \eta_2 + \theta_4 - \zeta_3 \quad \ldots(26a)$$

If the angle ζ_1 is to be found out in terms of the joint 4 angle θ_4, then the values of the angles ζ_2, and ζ_3 must be known in Equation (26a). For this we will assume that the angle ζ_3 is known to us with the help of encoder. So still the angle ζ_2 is to be determined in terms of the angle ζ_1. For this to be done, let's divide the quadrilateral $A_{10}A_{12}A_3A_{11}$ into two triangles as $\Delta A_{10}A_{12}A_3$ and $\Delta A_{10}A_{11}A_3$. By applying cosine rule for both the triangles, it gives,

$$(A_3A_{12})^2 + (A_{10}A_{12})^2 - 2(A_3A_{12})(A_{10}A_{12})\cos(\zeta_1) = (A_3A_{11})^2 + (A_{10}A_{11})^2 - 2(A_3A_{11})(A_{10}A_{11})\cos(\zeta_2) \quad \ldots(27)$$

Equation (27) gives the value of ζ_2 in terms of ζ_1, or vice versa. So from the Equation (29a) it can be written as,

$$\theta_4 = \zeta_1 + \zeta_2 + \pi - \eta_1 - \eta_2 + \zeta_3 \quad \ldots(26b)$$

Thus, the Equations (13), (16), (18), (20), (22) and (26b) shows the relation between the length of the actuators and joint angles θ_1, θ_2, θ_3 and θ_4. This means that if the joint variable values θ_1, θ_2, θ_3, θ_4 are substituted in Equations (9) and (10), the position and orientation of the point A_4 or O_4 can be find with respect to the base frame {0}. These equations show the direct kinematics of the backhoe excavator.

RESULTS AND DISCUSSION

The results of the direct kinematic model of backhoe are discussed and the results are

Table 2: Values of the Link Parameters and Geometry Constants Used in Direct Kinematic MATLAB Code

Description	Symbol	Value	Unit
Swing link length, boom link length, arm link length and bucket link length respectively	a_1	0.430	m
	a_2	1.347	
	a_3	0.723	
	a_4	0.547	
Geometry constant angles	α	52.72	Degree
	Y_1	46.23	
	Y_2	28.53	
	δ_1	33.23	
	α_2	139.54	
	ε_1	197.79	
	η_1	3.32	
	η_2	80.14	
	ζ_3	67.43	
Geometry constant distances, and the piston rod lengths of the actuators for maximum breakout force condition	XS	0.092	m
	OX	0.21507	
	OS	0.23386	
	OT	0.11556	
	ST	0.285	
	XU	0.092	
	OU	0.23386	
	OV	0.11556	
	UV	0.285	
	A_1A_5	0.67461	
	A_1A_6	0.21783	
	A_5A_6	0.70978	
	A_2A_7	0.91102	
	A_2A_8	0.28480	
	A_7A_8	0.86524	
	A_9A_{12}	0.74341	
	$A_{10}A_{12}$	0.220	
	A_9A_{10}	0.65907	
	A_3A_{12}	0.13254	
	A_3A_{11}	0.18103	
	$A_{10}A_{11}$	0.205	

obtained using the developed MATLAB code. The input values of the parameters are taken as per Table 2 for our case. The data given in the Table 2 captured from Figure 3 for validation of direct kinematic mathematical modeling of backhoe excavator based on maximum breakout force configuration as shown in Figure 3. The piston rod lengths of the actuators can be obtained from sensors during actual excavation operation but here for validation of work the piston rod lengths considered for maximum breakout force condition. If the lengths of the piston rods in hydraulic actuators and the $\angle A_{12}A_{10}A_{11} = \zeta_3$ can be determined by the sensors, and the backhoe geometrical constants are known then the position of the bucket hinge point (A_3) and point (A_4) can be determined by the MATLAB code developed. The values of the parameters used in the MATLAB code are given in Table 2.

While using the values as listed in Table 2 for MATLAB code, the joint angle values come out to be: $\theta_1 = 0°$, $\theta_2 = 15°$, $\theta_3 = 295.468°$, $\theta_4 = 360.0°$ and the Cartesian coordinates for the point ${}^0\boldsymbol{P}_{A3} = [2.19990 - 0.20151]^T$, and the Cartesian coordinates of the point ${}^0\boldsymbol{P}_{A4} = [2.55500 - 0.61761]^T$.

While using the same values as listed in Table 2 in the proposed 3-D model of the backhoe excavator attachment model, the values of joint angles and Cartesian coordinates of points ${}^0\boldsymbol{P}_{A3}$, ${}^0\boldsymbol{P}_{A4}$ are: $\theta_1 = 0°$, $\theta_2 = 15°$, $\theta_3 = 295.47°$, $\theta_4 = 360°$, ${}^0\boldsymbol{P}_{A3} = [2.199850 - 0.201541]^T$, and ${}^0\boldsymbol{P}_{A4} = [2.555820 - 0.618711]^T$, as seen in Figure 3.

As can be seen from the results that the differences in the mathematical kinematic model and the proposed 3-D model for the joint angles θ_1, θ_2, θ_3, and θ_4 are: 0°, 0°, –0.002°, and 0.029 respectively.

Figure 3: Direct Kinematic Results of the Proposed 3D Model

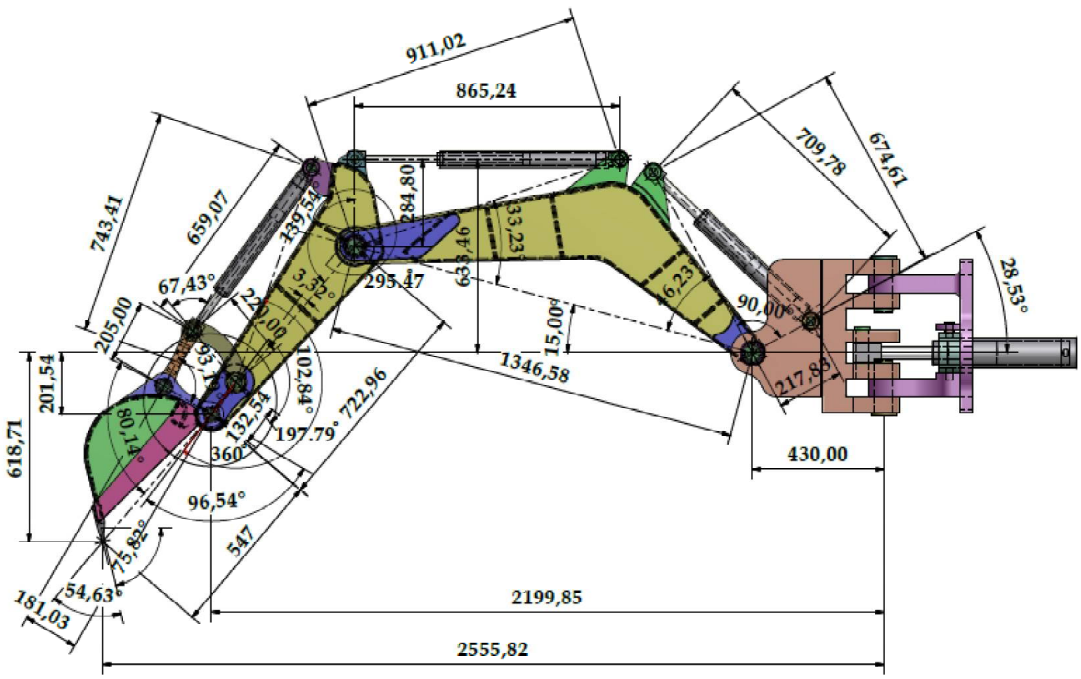

It can be seen that the difference between the joint 1 angle θ_1 is zero, and thus the mathematical model gives accurate controlling of the swing link from actuators 1 and 2, difference between the joint 2 angle θ_2 is also zero (0°), and thus while rotating the boom from the boom cylinder (actuator 3), the mathematical model holds accurate controlling of the boom. The difference between the joint 3 angle θ_3 is also very small (0.002°), and thus while rotating the arm from the arm-cylinder (actuator 4), the mathematical model holds accurate controlling of the arm as well, and the difference between the joint 4 angle θ_4 is also very small (0.029°), and thus the mathematical model holds accurate controlling of the bucket as well.

It can be seen that the bigger is the angle, the bigger is the difference. This may be due to the accuracy of the CAD software as well as of the Math tool, but these differences are very small and near to zero, so the results are identical and thus acceptable.

Results also suggest the differences in the coordinates of points ${}^0\boldsymbol{P}_{A3}$, ${}^0\boldsymbol{P}_{A4}$: $[0.00005\ 0\ 0.00004\ 1]^T$, and $[0.00082\ 0\ 0.00111\ 1]^T$ respectively. These show that the difference in the *x* direction for point A_3 is 0.05 mm and for point A_4 is 0.82 mm, the difference in the y direction for both the points is zero and the difference in the *z* direction for point A_3 is 0.04 mm and for point A_4 is 1.11 mm. The difference in the *z* direction is also small but comparatively higher than other coordinate points because the origin of the frame {0} can be chosen to be anywhere on the Z_0 axis, and as the position of the origin changes vertically on the Z_0 axis the *z* coordinates also change.

Results of the direct kinematic mathematical model suggest that the proposed direct kinematic model is validate to be used to determine the coordinates of the bucket hinge point A_3, and the tool point A_4 for an autonomous operation of the backhoe excavator.

Above discussion shows the validation of direct kinematic model for maximum breakout force configuration. The direct kinematic model of backhoe excavator also validated using the MATLAB code and simulation results obtained from the modeling software of Autodesk Inventor 2011. All the readings taken for the position of backhoe assembly at which the link axes are aligned to each other for the

Figure 4: Results of the Coordinates of Bucket Tip Due to Variation of Angle θ_2, θ_3, and θ_4 Obtained from MATLAB Code

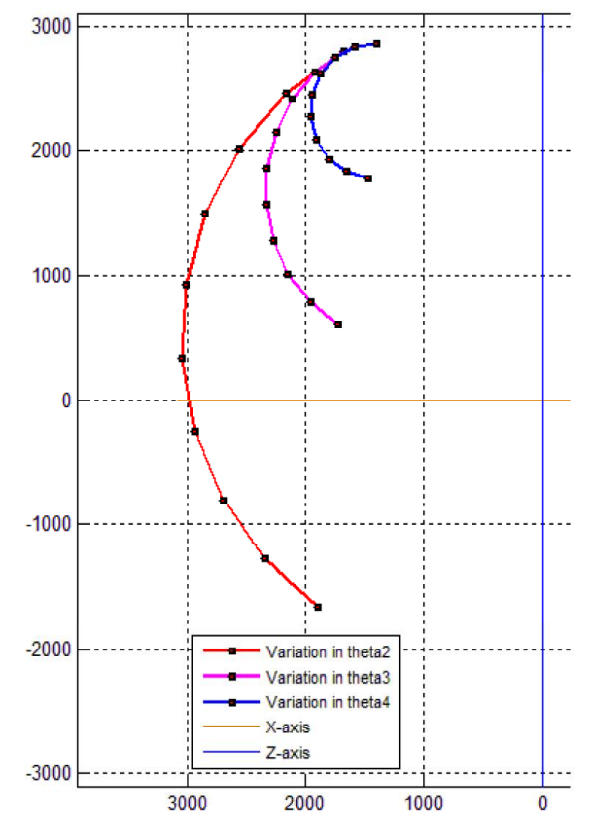

purpose of validation of the direct kinematic model. Figure 4 shows the results of coordinates of bucket tip due to variation of angle θ_2 (red curve), θ_3 (pink curve), and θ_4 (blue curve) respectively obtained from MATLAB code.

Figure 5 shows the results of coordinates of bucket tip due to variation of angle θ_2 (61.64° to –56° = 117.64°) obtained from simulation at which the angles θ_3 and θ_4 are taken as zero means axis of arm and bucket are aligned to axis of boom.

Table 3 shows the comparison of bucket tip coordinates obtained from MATLAB code and simulation, due to variation in angle θ_2.

Figure 5: Results of the Coordinates of Bucket Tip Due to Variation of Angle θ_2 Obtained from Simulation

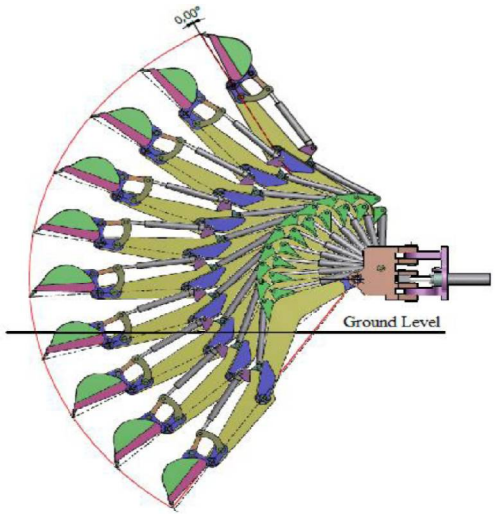

Table 3: Comparison of Bucket Tip Coordinate ${}^0P_{A4}$ Due to Variation in Joint Angle θ_2

S. No.	Input Angle θ_2 (degree)	Results of MATLAB Code		Input Angle θ_2 (degree)	Results of Simulation	
		X-Coordinate ${}^{0x}P_{A4}$ (mm)	Z-Coordinate ${}^{0z}P_{A4}$ (mm)		X-Coordinate ${}^{0x}P_{A4}$ (mm)	Z-Coordinate ${}^{0z}P_{A4}$ (mm)
1.	61.6400	1673.1	2802.9	61.64	1672.98	2802.34
2.	48.5689	2161.7	2462.1	48.57	2164.21	2459.13
3.	35.4978	2560.6	2019.6	35.50	2561.48	2017.41
4.	22.4267	2849.1	1498.4	22.43	2848.58	1498.12
5.	9.3556	3012.2	925.4	9.36	3011.57	925.70
6.	–3.7156	3041.5	330.4	–3.72	3041.44	338.58
7.	–16.7867	2935.5	–255.8	–16.79	2936.63	249.96
8.	–29.8578	2699.6	–802.9	–29.86	2699.02	802.81
9.	–42.9289	2346.2	–1282.4	–42.93	2345.52	1282.28
10.	–56.0000	1893.4	–1669.6	–56.00	1894.19	1668.38
Avg.	32.6778	2517.29	1404.95	32.68	2517.562	1404.471

Figure 6 shows the results of coordinates of bucket tip due to variation of angle θ_3 (0° to –120.45° = 120.45°) obtained from simulation at which the angles θ_2 is considered at an angle of 61.64° and θ_4 is taken as zero means axis of bucket is aligned to axis of arm. Table 4 shows the comparison of bucket tip coordinates obtained from MATLAB code and simulation, due to variation in angle θ_3.

Figure 7 shows the results of coordinates of bucket tip due to variation of angle θ_4 (–145.41° to 30.04° = 175.45°) obtained from simulation at which the angles θ_2 is considered at an angle of 61.64° and θ_3 is taken as zero

Figure 6: Results of the Coordinates of Bucket Tip Due to Variation of Angle θ_3 Obtained from Simulation

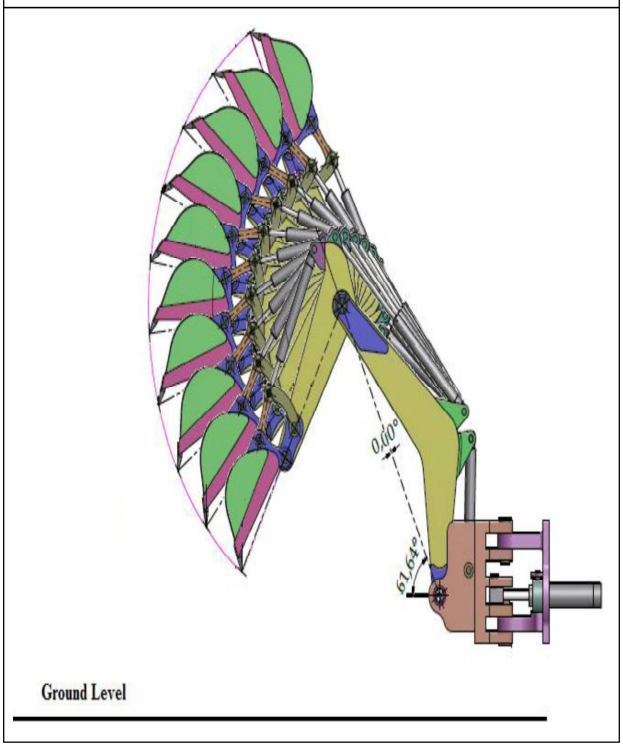

Figure 7: Results of the Coordinates of Bucket Tip Due to Variation of Angle θ_4 Obtained from Simulation

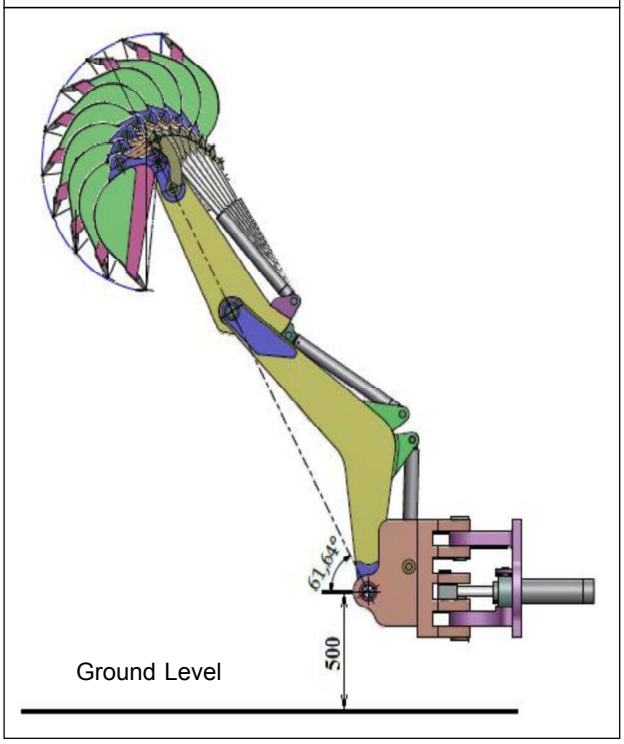

Table 4: Comparison of Bucket Tip Coordinate ${}^{0}P_{A4}$ Due to Variation in Joint Angle θ_3

S. No.	Input Angle θ_3 (degree)	Results of MATLAB Code		Input Angle θ_3 (degree)	Results of Simulation	
		X-Coordinate ${}^{0x}P_{A4}$ (mm)	Z-Coordinate ${}^{0z}P_{A4}$ (mm)		X-Coordinate ${}^{0x}P_{A4}$ (mm)	Z-Coordinate ${}^{0z}P_{A4}$ (mm)
1.	00.0000	1673.1	2802.9	00.00	1672.98	2802.34
2.	–13.3833	1915.5	2632.9	–13.38	1915.18	2632.40
3.	–26.7667	2111.8	2411.5	–26.77	2111.62	2410.82
4.	–40.1500	2251.5	2150.6	–40.15	2251.30	2150.05
5.	–53.5333	2327.1	1864.4	–53.53	2326.87	1863.90
6.	–66.9167	2334.5	1568.5	–66.91	2334.17	1568.26
7.	–80.3000	2273.1	1279.0	–80.30	2272.77	1278.59
8.	–93.6833	2146.4	1011.5	–93.68	2146.07	1011.20
9.	–107.0667	1961.2	780.6	–107.07	1960.72	780.18
10.	–120.4500	1727.5	598.9	–120.45	1727.18	598.56
Avg.	60.225	2072.16	1710.08	60.224	2071.886	1709.63

means axis of arm is aligned to axis of boom. Table 5 shows the comparison of bucket tip coordinates obtained from MATLAB code and simulation, due to variation in angle θ_4.

Table 5: Comparison of Bucket Tip Coordinate ${}^{0}\boldsymbol{P}_{A4}$ Due to Variation in Joint Angle θ_4

S. No.	Input Angle θ_4 (degree)	Results of MATLAB Code		Input Angle θ_4 (degree)	Results of Simulation	
		X-Coordinate ${}^{0x}\boldsymbol{P}_{A4}$ (mm)	Z-Coordinate ${}^{0z}\boldsymbol{P}_{A4}$ (mm)		X-Coordinate ${}^{0x}\boldsymbol{P}_{A4}$ (mm)	Z-Coordinate ${}^{0z}\boldsymbol{P}_{A4}$ (mm)
1.	30.0400	1397.2	2868.3	30.04	1401.01	2866.70
2.	10.5456	1580.6	2842.3	10.55	1584.26	2840.10
3.	–8.9489	1744.8	2756.6	–8.95	1748.14	2753.87
4.	–28.4433	1871.0	2621.0	–28.44	1873.85	2617.89
5.	–47.9378	1944.7	2451.1	–47.94	1946.98	2447.72
6.	–67.4322	1957.5	2266.4	–67.43	1959.13	2262.97
7.	–86.9267	1907.9	2087.9	–86.93	1908.91	2084.71
8.	–106.4211	1801.5	1936.3	–106.42	1802.09	1933.45
9.	–125.9156	1650.7	1828.8	–125.92	1650.94	1826.51
10.	–145.4100	1472.6	1777.8	–145.41	1472.76	1776.13
Avg.	65.77112	1732.85	2343.65	65.803	1734.807	2341.005

The comparison of results of MATLAB code and simulation presented in Table 3 indicate that the % variation in average value of coordinate *X* of bucket tip point ${}^{0}\boldsymbol{P}_{A4}$ is 0.0108%, and % variation in average value of coordinate *Y* of bucket tip point ${}^{0}\boldsymbol{P}_{A4}$ is 0.0341% due to % variation in average value of angle θ_2 is 0.006732%. These results indicate that the variations in results are very less and the direct kinematic model is validated for angle θ_2.

Table 4 shows the comparison of results of MATLAB code and simulation which present that the % variation in average value of coordinate *X* of bucket tip point ${}^{0}\boldsymbol{P}_{A4}$ is 0.01322%, and % variation in average value of coordinate *Y* of bucket tip point ${}^{0}\boldsymbol{P}_{A4}$ is 0.02631% due to % variation in average value of angle θ_3 is 0.00166%. These results indicate that the variations in results are very less and the direct kinematic model is validated for angle θ_3.

Table 5 shows the comparison of results of MATLAB code and simulation which present that the % variation in average value of coordinate *X* of bucket tip point ${}^{0}\boldsymbol{P}_{A4}$ is 0.113%, and % variation in average value of coordinate *Y* of bucket tip point ${}^{0}\boldsymbol{P}_{A4}$ is 0.113% due to % variation in average value of angle θ_4 is 0.04845%. These results indicate that the variations in results are very less and the direct kinematic model is validated for angle θ_4.

CONCLUDING REMARKS

This paper presents the complete fundamental foundation for the kinematics of the backhoe excavators. Here, theoretical relations are developed for the direct kinematics of the hydraulic backhoe excavator, which have not previously been presented in the literature for 4-DOF. The developed relations can be utilized for autonomous digging operation. Here presented relations are developed with considering the links and joints are rigid. During the digging operation interactive forces

developed between soil and tool (for our case it is bucket), also the digging forces and torque developed by the actuators causes the bending effect in the link mechanism and their joints. Due to this the developed kinematic relations will contain inaccuracies in the result. Here, for kinematic relations the resistive forces offered by the soil-tool interactions and digging forces developed by the actuators are not considered. But the results obtained for virtual movement of the backhoe excavator mechanism shows the excellent outcome in terms of result. The proposed inverse kinematic model with consideration of differential motion of backhoe for velocity and acceleration, Inverse Jacobian and backhoe static backhoe model are developed and covered in the part-II of this paper (Bhaveshkumar and Prajapati, 2012).

A complete generalized mathematical direct kinematic model for four degrees of freedom backhoe excavator is developed and can be applied to any backhoe excavator for automated movements of the backhoe excavator. The MATLAB codes are developed for direct kinematics of the backhoe excavator and the 3-D model of the backhoe excavator developed using Autodesk Inverter Professional 2011. The parameters taken as input of the MATLAB code of the proposed direct kinematic model are obtained for maximum breakout force configuration of the backhoe excavator, and the MATLAB code gives the identical results as compared to the proposed 3-D model of the backhoe attachment developed in Autodesk Inventor Professional 2011 for same configuration and thus the proposed kinematic model gives the excellent accurate results. The proposed direct kinematic model is validated through the comparison of results of MATLAB code and simulation and obtained results are identical. The developed direct kinematic relations can be applied for autonomous operation for all types heavy duty backhoe excavators.

REFERENCES

1. Bhaveshkumar P Patel and Prajapati J M (2012), "Kinematics of Mini Hydraulic Backhoe Excavator – Part: II", *International Journal of Mechanisms and Robotic Systems*, September 10, Inderscience, Accepted for Publication.
2. Howard N Cannon (1999), "Extended Earthmoving with an Autonomous Excavator", Unpublished Thesis of Master of Science, The Robotics Institute Carnegie Mellon University, Pittsburgh.
3. John J Craig (1989), *Introduction to Robotics Machines and Control*, 2nd Edition, Addison-Wesley Publishing Company, New York.
4. Koivo A J (1994), "Kinematics of Excavators (Backhoes) for Transferring Surface Material", *Journal of Aerospace Engineering*, Vol. 7, No. 1, pp. 17-32, American Society of Civil Engineering (ASCE).
5. Mittal R K and Nagrath I J (2003), *Robotics and Control*, 9th Reprint, Tata McGraw Hill, New Delhi.
6. Shaban E M, Ako S, Taylor C J and Seward D W (2008), "Development of an Automated Vertically Alignment System for a Vibro-Lance", *Journal of Automation in Construction*, Vol. 17, pp. 645-655, Elsevier.

7. Vaha P K and Skibniewski M J (1993), "Dynamic Model of Excavator", *Journal of Aerospace Engineering*, Vol. 6, No. 2, pp. 148-158, American Society of Civil Engineering (ASCE).
8. Zygmunt Towarek (2003), "Dynamics of a Single-Bucket Excavator on a Deformable Soil Foundation During the Digging of the Ground", *International Journal of Mechanical Sciences*, Vol. 45, pp. 2053-1076, Elsevier.